5/31/01 11:14:37 AM \\GDOT-DSN1\GOPLOT\OCE\gord_oce9600_mylar.pcf darbyd M:\David\working\4961.prt

STATE	PROJECT NUMBER	SHEET NO.	TOTAL SHEETS
GA.	STP-M002-00 (113)	75	80

PRECAST CONCRETE BARRIER DETAILS

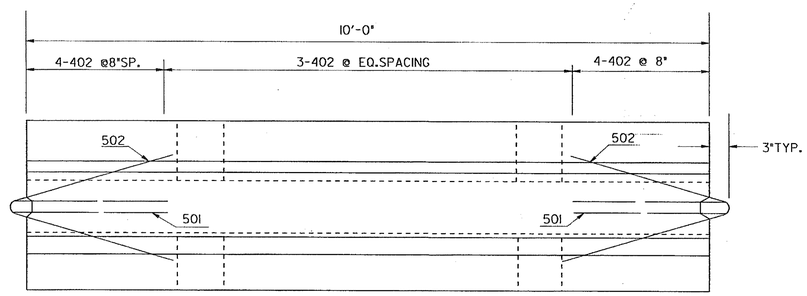

PLAN

NOTE:
BARRIER SECTIONS SHALL BE CONNECTED TOGETHER WITH THE 1¼" DIA. A-307 DOUBLE HEX CONNECTION BOLT. THE BOTTOM NUT & WASHER SHALL BE MAINTAINED BY THE CONTRACTOR FOR THE DURATION OF THE BARRIER INSTALLATION.

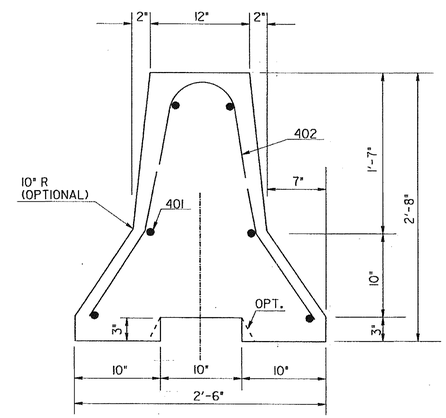

END ELEVATION

GENERAL NOTES:

1-MATERIALS: CLASS 'A' CONCRETE AND 40 STEEL.

2-SEE GA. SPECIFICATIONS FOR BASIS OF PAYMENT AND METHOD NO. .

3-REINFORCEMENT, HAVING AN AREA AT LEAST EQUAL TO REBARS SHOWN, MAY BE USED AS AN ALTERNATE.

4-BARRIERS SHALL BE PLACED SUCH THAT OPENINGS BETWEEN INDIVIDUAL SECTIONS SHALL BE KEPT TO A MINIMUM.

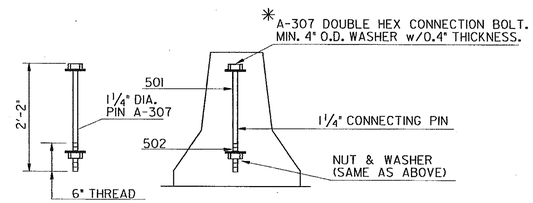

PIN CONNECTION

*AN ALTERNATE CONNECTING PIN WITH A FUSED NUT ON THE TOP THREADED PORTION AND NUT AND WASHER AS SPECIFIED ON THE BOTTOM MAY ALSO BE USED.

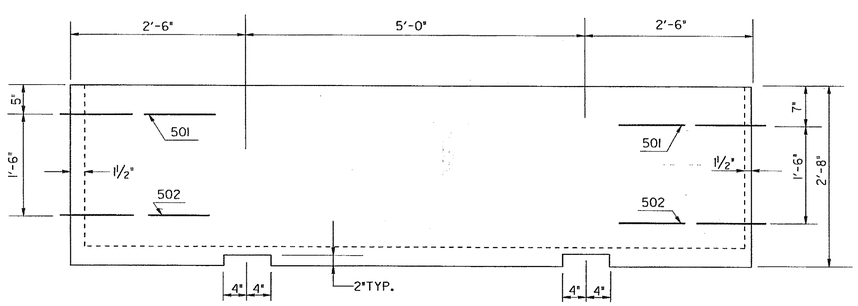

SIDE VIEW

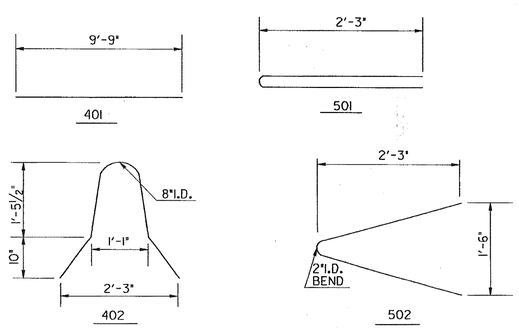

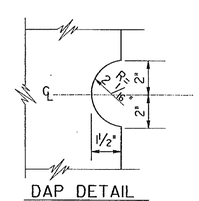

DAP DETAIL

	5-2-01	DATE
REV. REBAR & PIN CONN.	5-10-96	
COTTER PIN REQUIREMENT		REVISION
R.M.U.		BY

DEPARTMENT OF TRANSPORTATION
STATE OF GEORGIA

STANDARD
DETAILS OF PRECAST TEMPORARY BARRIERS

NO SCALE — AUG., 1995

DES. ___ DRW. ___ TRA. ___ CHK. ___

(SUBMITTED) STATE ROAD & AIRPORT DESIGN ENGR.

(APPROVED) CHIEF ENGINEER

NUMBER 4961

5/31/01 11:14:37 AM \\GDOT-DSN1\GOPLOT\OCE\gord_oce9600_mylar.pcf darbyd M:\David\working\4961.prt GO-R06