STATE	PROJECT NUMBER	SHEET NO.	TOTAL SHEETS
GA.	STP-M002-00 (113)	41	80

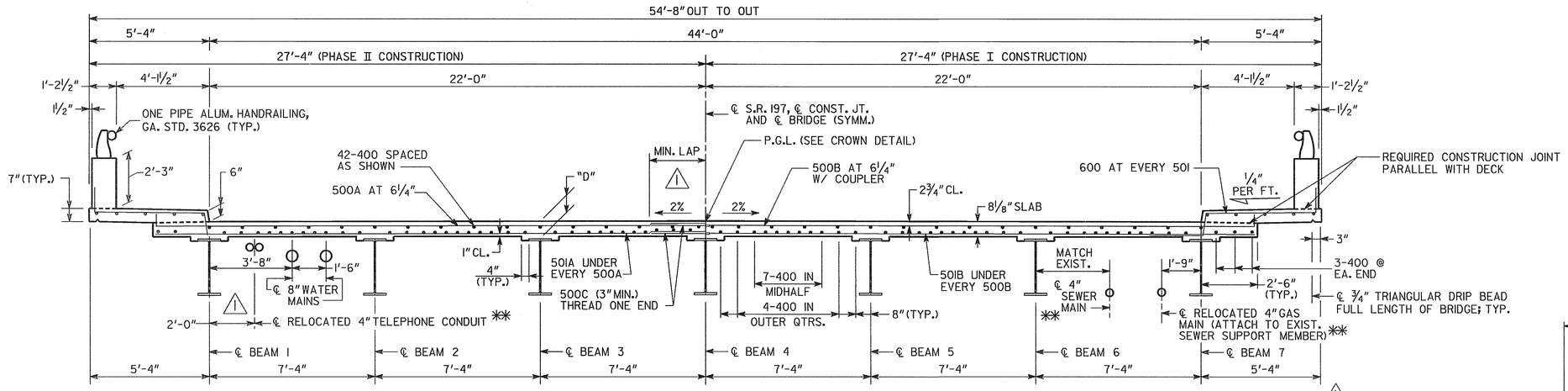

** UTILITIES DO NOT PASS THROUGH ENDWALL

SECTION THRU SLAB

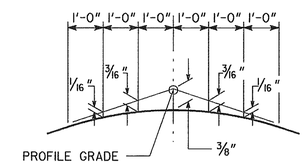

CROWN DETAIL

2% CROSS SLOPE

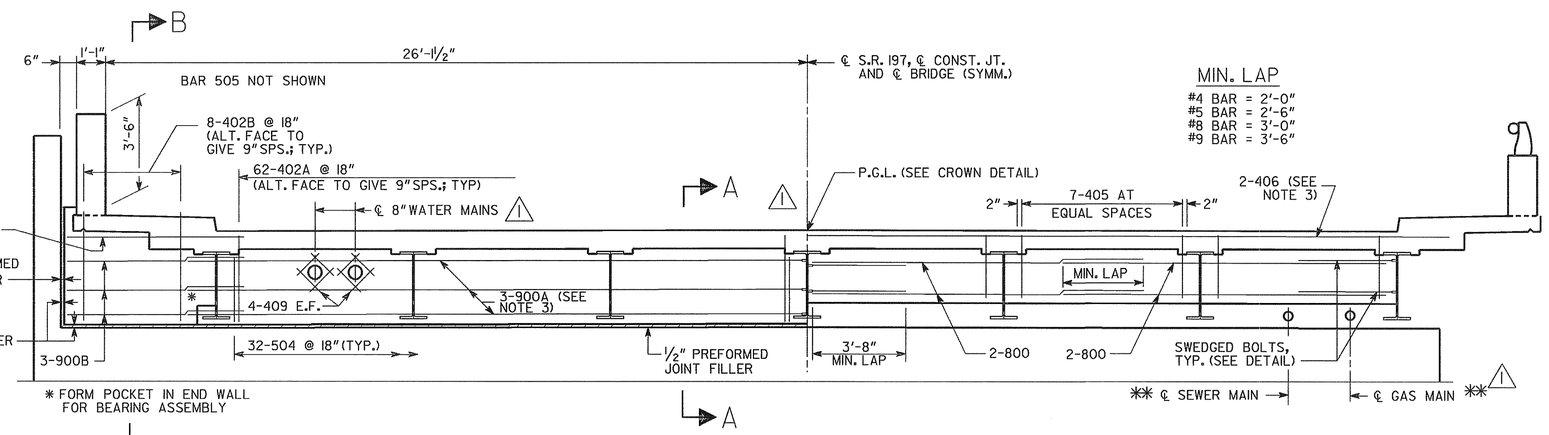

SECTION THRU ENDWALL

SECTION THRU EDGE BEAM

MIN. LAP

#4 BAR = 2'-0"
#5 BAR = 2'-6"
#8 BAR = 3'-0"
#9 BAR = 3'-6"

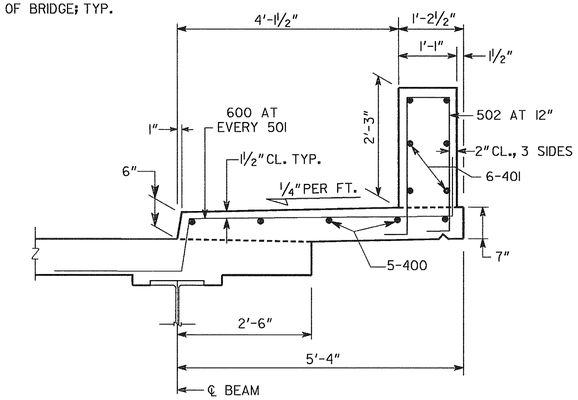

SIDEWALK AND PARAPET DETAILS

NOTES

1) CLEARANCE OF REINFORCEMENT IS 2" UNLESS NOTED OTHERWISE.

2) DIMENSION "D" IS MEASURED FROM TOP OF SLAB TO TOP OF BEAMS AT CENTERLINE BEARING. VARY "D" BETWEEN BEARINGS TO COMPENSATE FOR DEAD LOAD DEFLECTION. MAINTAIN A CONSTANT SLAB THICKNESS OF 8⅛"

"D" = 8⅝" (BM 1 & 7)
9" (BM 2 & 6)
9¾" (BM 3 & 5)
10⅞" (BM 4)

3) PROVIDE COUPLERS ON BARS IN PHASE I AND 3" THREADED ENDS ON BARS IN PHASE II.

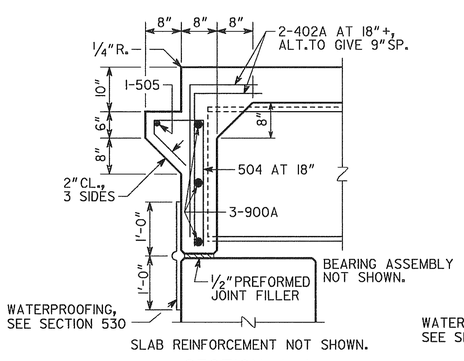

SECTION A-A

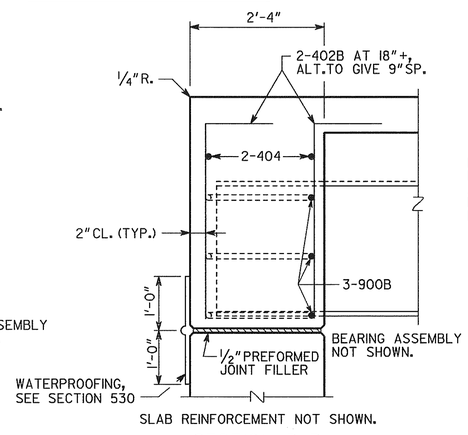

SECTION B-B

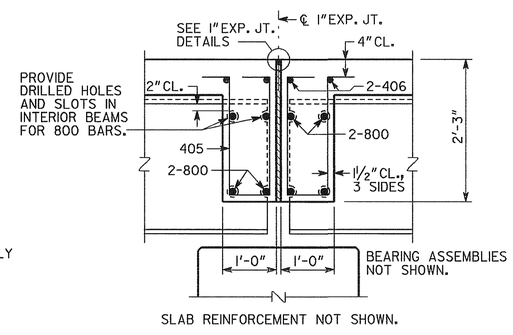

SECTION THRU EDGE BEAM

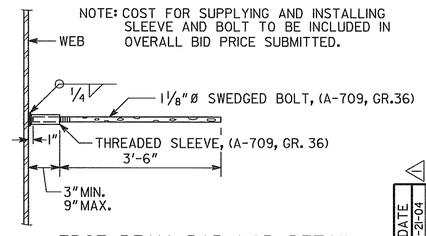

EDGE BEAM BAR LAP DETAIL

BRIDGE NO. 2

J.B. TRIMBLE, INC.
6445 Powers Ferry Rd.
Atlanta GA 30339
(770) 952-1022

GEORGIA
DEPARTMENT OF TRANSPORTATION
OPERATIONS DIVISION-OFFICE OF MAINTENANCE

DISTRICT 1 BRIDGE REPAIR
S.R. 197 OVER SOQUE RIVER
DECK SECTIONS

HABERSHAM COUNTY STP-M002-00 (113)

SCALE: AS SHOWN OCTOBER 2003

BY	REVISIONS	DATE
GLE	UTILITIES / BARS	1-21-04

BRIDGE SHEET 3 OF 4

DESIGNED PJC | CHECKED GLE | REVIEWED EHG
DRAWN ITD | DESIGN GROUP MAINTENANCE | APPROVED STH

C:\DGN\313029\113\BR2\113B2DS.DGN 7-29-03 ITD