STATE	PROJECT NUMBER	SHEET NO.	TOTAL SHEETS
GA.	STP-M002-00 (113)	35	80

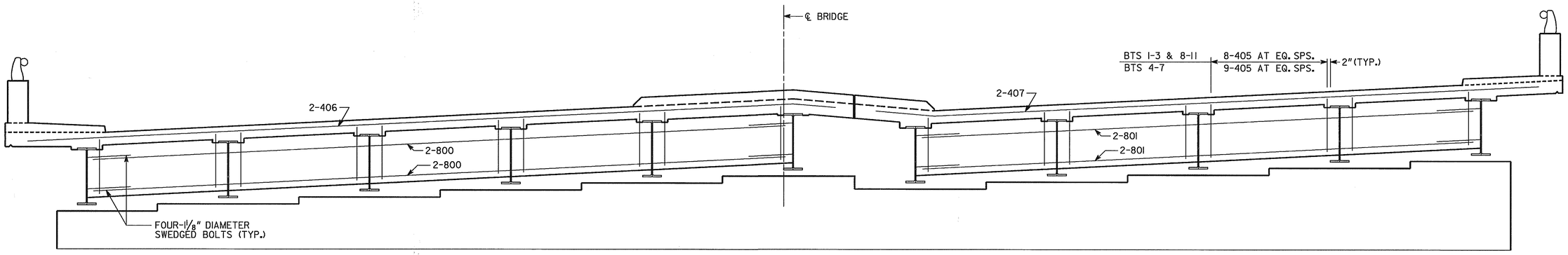

DECK SECTION AT EDGE BEAM

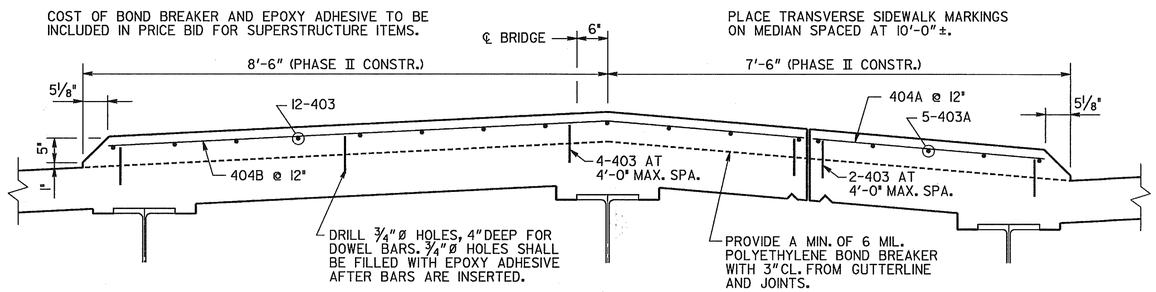

RAISED MEDIAN DETAIL

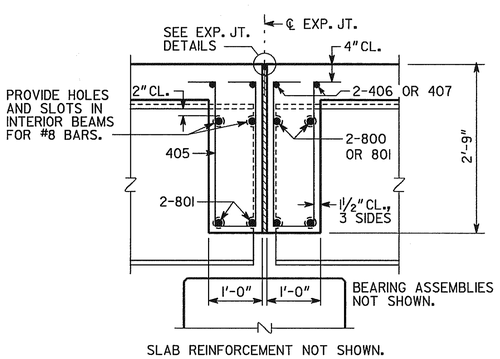

SECTION THRU EDGE BEAM

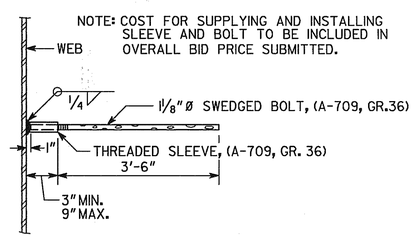

EDGE BEAM BAR LAP DETAIL

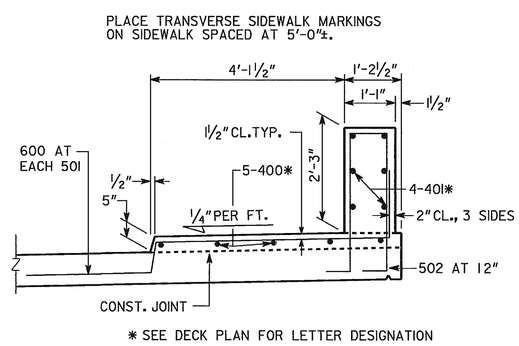

SIDEWALK AND PARAPET DETAILS

BRIDGE NO. 1

J.B. TRIMBLE, INC.
6445 Powers Ferry Rd.
Atlanta GA 30339
(770) 952-1022

GEORGIA
DEPARTMENT OF TRANSPORTATION
OPERATIONS DIVISION-OFFICE OF MAINTENANCE

DISTRICT 1 BRIDGE REPAIR
S.R. 53 CONNECTOR OVER NORFOLK SOUTHERN RAILWAY AND CSX TRANSPORTATION
DECK SECTION - SHEET II
HALL COUNTY STP-M002-00 (113)

SCALE: AS SHOWN OCTOBER 2003

BY	REVISIONS	DATE

BRIDGE SHEET 6 OF 9

DESIGNED ARK | CHECKED GLE | REVIEWED EHG
DRAWN ITD | DESIGN GROUP MAINTENANCE | APPROVED STH

C:\DGN\313029\113\BRI\113BI