STATE	PROJECT NUMBER	SHEET NO.	TOTAL SHEETS
GA.	STP-M002-00 (113)	34	80

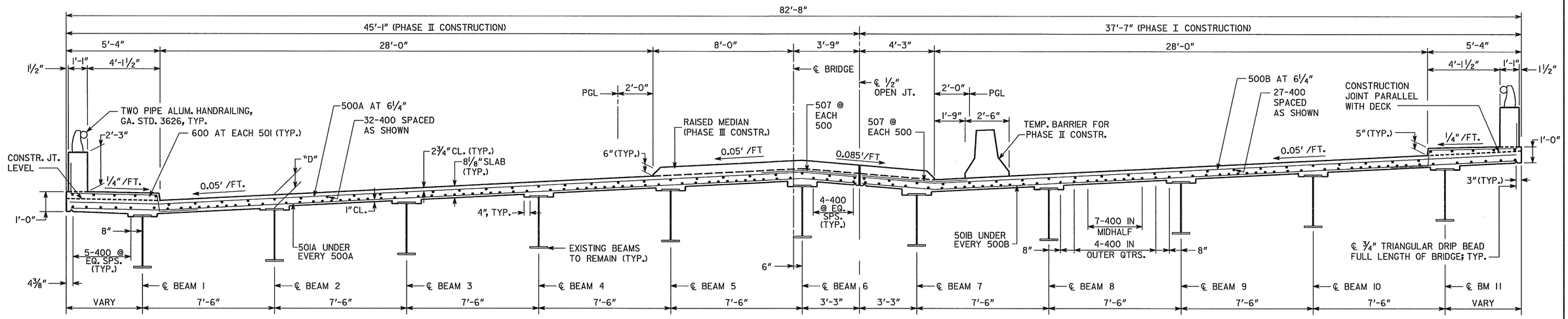

DECK SECTION

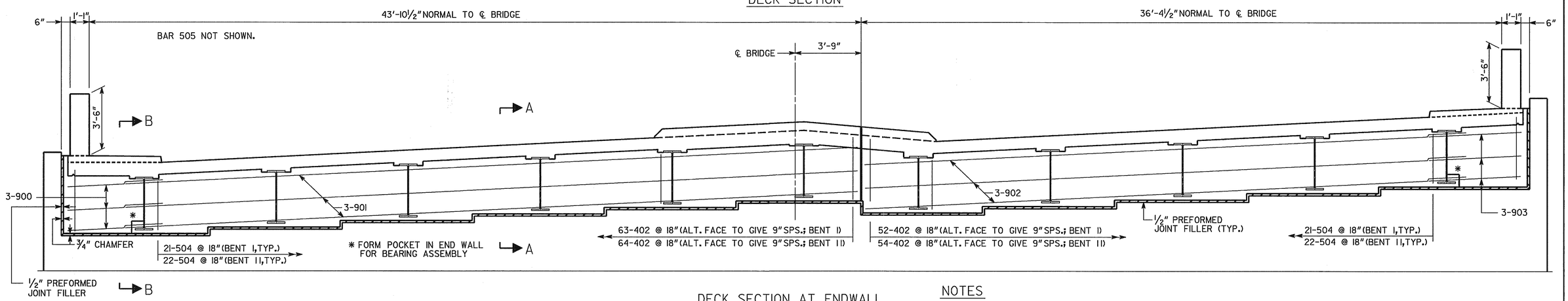

DECK SECTION AT ENDWALL

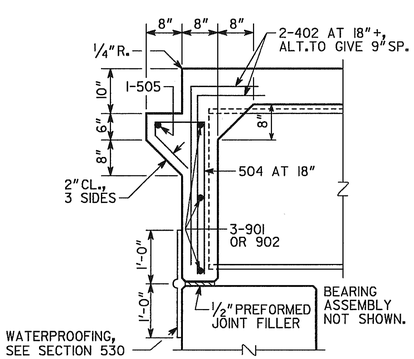

SECTION A-A

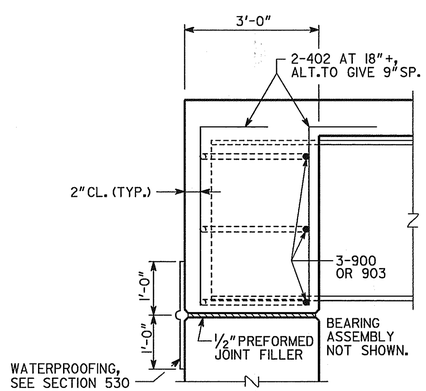

SECTION B-B

NOTES

1) CLEARANCE OF REINFORCEMENT IS 2" UNLESS NOTED OTHERWISE.
2) DIMENSION "D" IS MEASURED FROM TOP OF SLAB TO TOP OF BEAMS AT CENTERLINE BEARING. VARY "D" BETWEEN BEARINGS TO COMPENSATE FOR DEAD LOAD DEFLECTION AND VERTICAL CURVE. MAINTAIN CONSTANT SLAB THICKNESS AS SHOWN IN SECTIONS. "D" = 8½" (ALL BEAMS)
3) ALL DIMENSIONS ARE RADIAL.
4) BEAMS ARE ARRANGED ON CHORDS OF CONCENTRIC CIRCLES.

BRIDGE NO. 1

J.B. TRIMBLE, INC.
6445 Powers Ferry Rd.
Atlanta GA 30339
(770) 952-1022

GEORGIA
DEPARTMENT OF TRANSPORTATION
OPERATIONS DIVISION-OFFICE OF MAINTENANCE

DISTRICT 1 BRIDGE REPAIR
S.R. 53 CONNECTOR OVER NORFOLK SOUTHERN RAILWAY AND CSX TRANSPORTATION
DECK SECTION - SHEET I

HALL COUNTY — STP-M002-00 (113)

SCALE: AS SHOWN — OCTOBER 2003

DATE	REVISIONS	BY

BRIDGE SHEET 5 OF 9

DESIGNED ARK — CHECKED GLE — REVIEWED EHG
DRAWN ITD — DESIGN GROUP MAINTENANCE — APPROVED STH

C:\DGN\313029\113\BRI\113B1