STATE	PROJECT NUMBER	SHEET NO.	TOTAL SHEETS
GA.	STP-41002-00(112)	32	40

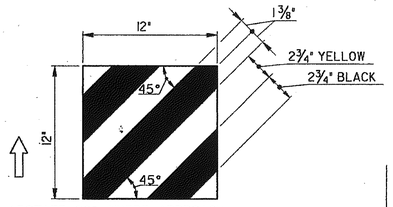

(ROTATE 90° WHERE APPROACH TRAFFIC IS ON RIGHT SIDE)

NOSE STRIPING DETAIL

BLACK GLOSS ENAMEL INK SCREEN PRINTED ON PRESSURE SENSITIVE ENGINEER GRADE REFLECTIVE SHEETING, TP. I, LEVEL 'A'. (SECTION 913)

OFFSET NOTE:
THE POST OFFSET DIMENSIONS ARE GIVEN TO THE CENTER OF THE TRAFFIC FACE OF THE BLOCKOUTS.. EXCEPT AT THE FIRST TWO POSTS. WHERE THE DIMENSION IS TO THE CENTER OF THE TRAFFIC FACE OF THE POST. OFFSET POINTS ARE TO BE LOCATED BY CHORD MEASUREMENTS AT THE BACK OF THE RAIL EQUAL TO THE NOMINAL POST SPACINGS SHOWN. POSTS ARE TO BE SET APPROXIMATELY RADIAL TO THE RAILING AT EACH POST LOCATION.

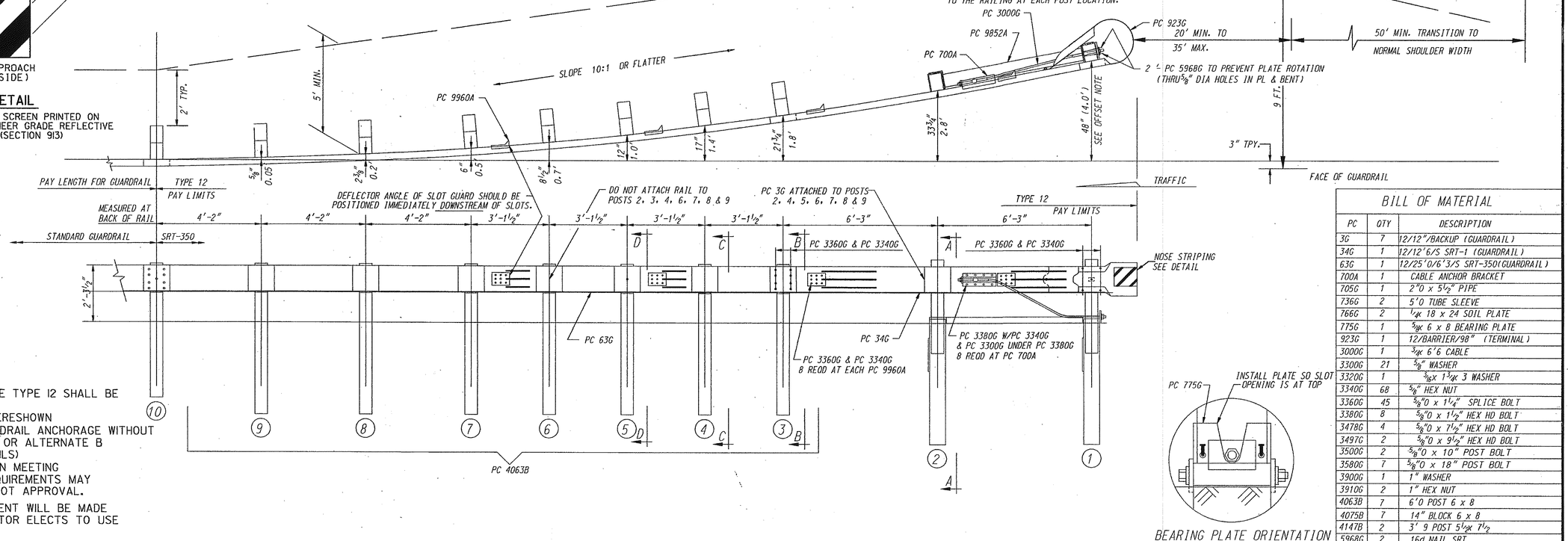

NOTE:

GUARDRAIL ANCHORAGE TYPE 12 SHALL BE EITHER

(a) SYRO SRT-350 AS HERESHOWN

(b) SPECIAL DESIGN GUARDRAIL ANCHORAGE WITHOUT FLARE, ALTERNATE A OR ALTERNATE B (SEE SEPARATE DETAILS)

(c) AN ALTERNATE DESIGN MEETING NCHRP-350, TL-3 REQUIREMENTS MAY BE SUBMITTED FOR DOT APPROVAL.

NO ADDITIONAL PAYMENT WILL BE MADE WHERE THE CONTRACTOR ELECTS TO USE (b) OR (c).

BEARING PLATE ORIENTATION

BILL OF MATERIAL

PC	QTY	DESCRIPTION
3G	7	12/12"/BACKUP (GUARDRAIL)
34G	1	12/12'6/S SRT-1 (GUARDRAIL)
63G	1	12/25'0/6'3/S SRT-350(GUARDRAIL)
700A	1	CABLE ANCHOR BRACKET
705G	1	2"O x 5 1/2" PIPE
736G	2	5'O TUBE SLEEVE
766G	2	1/4"x 18 x 24 SOIL PLATE
775G	1	5/8"x 6 x 8 BEARING PLATE
923G	1	12/BARRIER/98" (TERMINAL)
3000G	1	3/4" 6'6 CABLE
3300G	21	5/8" WASHER
3320G	1	3/16"x 1 3/4" 3 WASHER
3340G	68	5/8" HEX NUT
3360G	45	5/8"O x 1 1/4" SPLICE BOLT
3380G	8	5/8"O x 1 1/2" HEX HD BOLT
3478G	4	5/8"O x 7 1/2" HEX HD BOLT
3497G	2	5/8"O x 9 1/2" HEX HD BOLT
3500G	2	5/8"O x 10" POST BOLT
3580G	7	5/8"O x 18" POST BOLT
3900G	1	1" WASHER
3910G	2	1" HEX NUT
4063B	7	6'O POST 6 x 8
4075B	7	14" BLOCK 6 x 8
4147B	2	3' 9 POST 5 1/2"x 7 1/2
5968G	2	16d NAIL SRT
9852A	1	STRUT ASSEMBLY
9960A	4	SLOT GUARD
9961G	1	3/8"x 3 x 4 PLATE WASHER

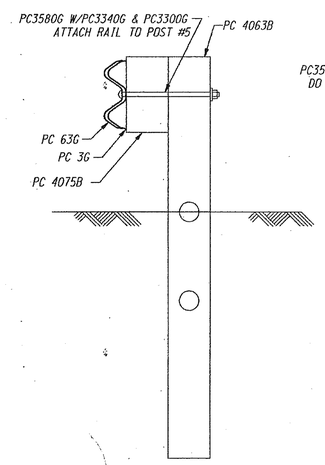

SECTION "D-D"
(@ POST #5)

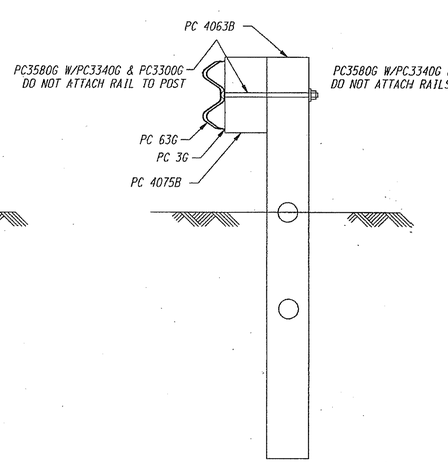

SECTION "C-C"
(@ POSTS #4, #6, #7, #8 & #9)

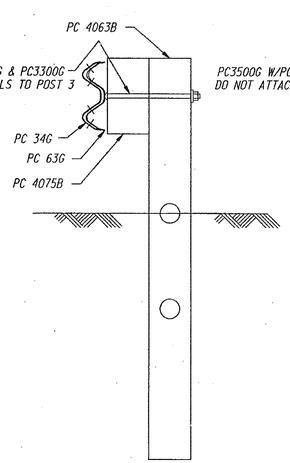

SECTION "B-B"
(@ POST #3)

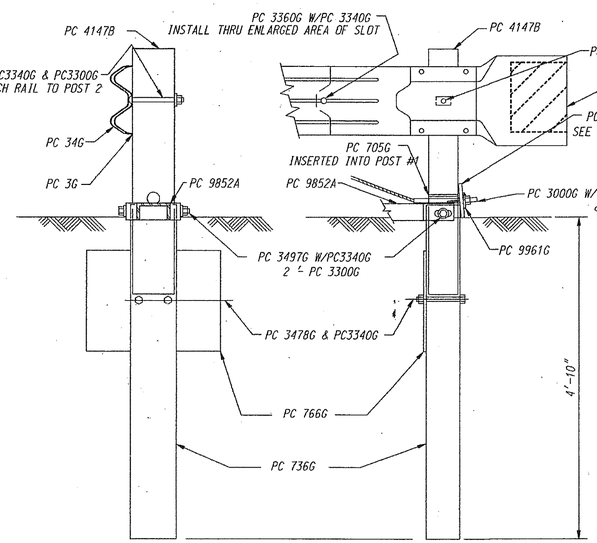

SECTION "A-A"
(@ POST #2)

ENLARGED VIEW @ POST #1

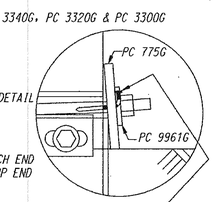

2 ⌊ PC 5968G TO PREVENT PLATE ROTATION
(THRU 5/8" DIA HOLES IN PL & BENT)

DETAILS NOT SHOWN WILL BE ACCORDING TO THE MANUFACTURERS REQUIREMENTS AND AS APPROVED BY THE ENGINEER. THE CONTRACTOR SHALL OBTAIN A COPY OF THE MANUFACTURERS INSTALLATION INSTRUCTIONS.

	7-31-97	DATE	DEPARTMENT OF TRANSPORTATION STATE OF GEORGIA
	REVISED NOTES	REVISION	STANDARD GUARDRAIL ANCHORAGE TYPE 12
	RMU	BY	JULY 1997
DES. ___ DRW. ___ TRA. ___ CHK. ___	(SUBMITTED) STATE ROAD & AIRPORT DESIGN ENGR. (APPROVED) CHIEF ENGINEER		NUMBER 4040

Tue Nov 25 09:28:28 1997 pt73blorm\queue\VAXAPPE.get DTRDGJP rev4040pt