STATE	PROJECT NUMBER	SHEET NO.	TOTAL SHEETS
GA.	STP-M002-00(112)	30	40

GUARDRAIL ANCHORAGE TYPE I

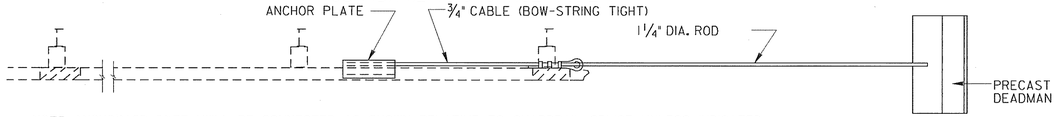

NOTE: ANCHORAGE TYPE I WILL BE CONNECTED AS SHOWN RELATIVE TO GUARDRAIL SPLICE, UNLESS INDICATED OTHERWISE ON PLANS. SEE APPLICABLE STANDARDS OR CONSTRUCTION DETAILS FOR ACTUAL LOCATION.

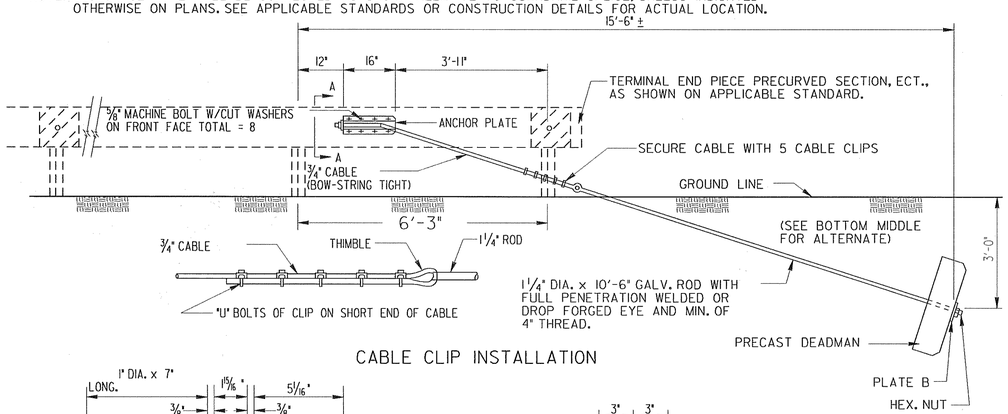

CABLE CLIP INSTALLATION

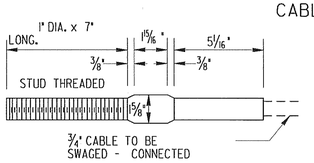

SWAGED FITTING AND STUD

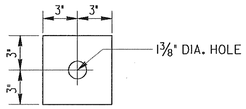

GALV. PLATE 6" x 1/2" x 6"

PLATE "B"

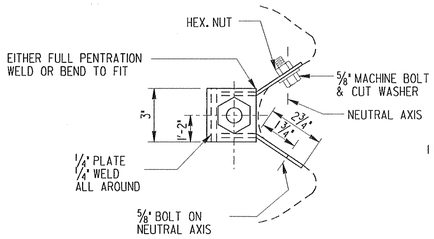

SECTION A-A

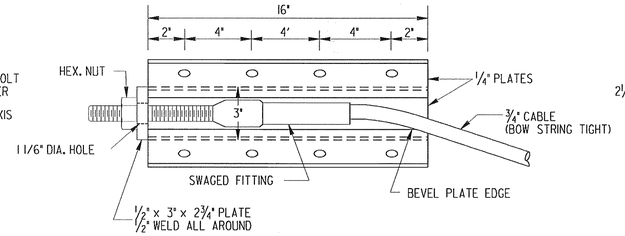

STANDARD ANCHOR PLATE

NOTE:
THE 5 mm ONE PIECE STEEL PLATE SHOWN HERE MAY BE USED AS AN ALTERNATE TO THE STANDARD 6 mm WELDED PLATE SHOWN ABOVE..

NOTE:
ANCHOR PLATES SHOWN HERE WITH GUARDRAIL (TYPE "W") ATTACHMENT TO GUARDRAIL (TYPE "T") WILL BE THE SAME EXCEPT THAT THE ANCHOR PLATE WILL BE LOCATED BETWEEN THE BOTTOM AND MIDDLE CORRUGATIONS.

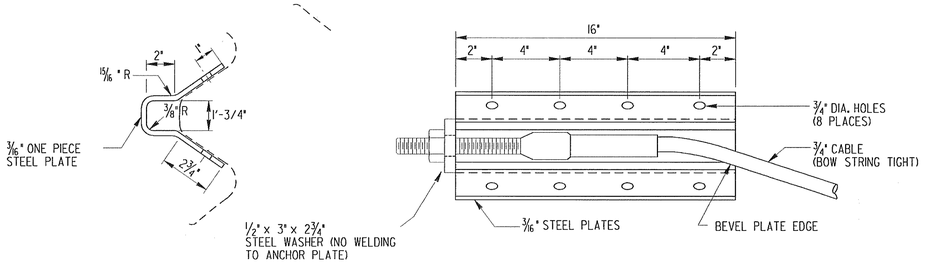

ALTERNATE ANCHOR PLATE

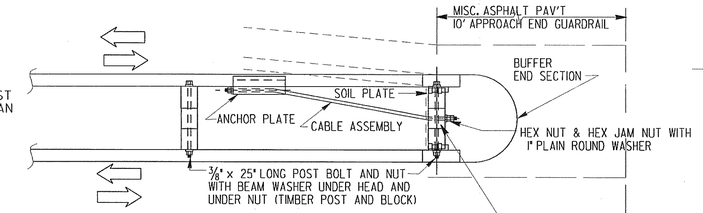

TOP VIEW - DOUBLE FACE CABLE ANCHOR OPTION

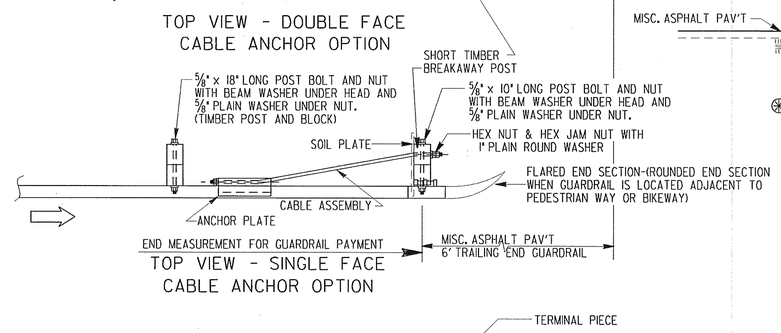

TOP VIEW - SINGLE FACE CABLE ANCHOR OPTION

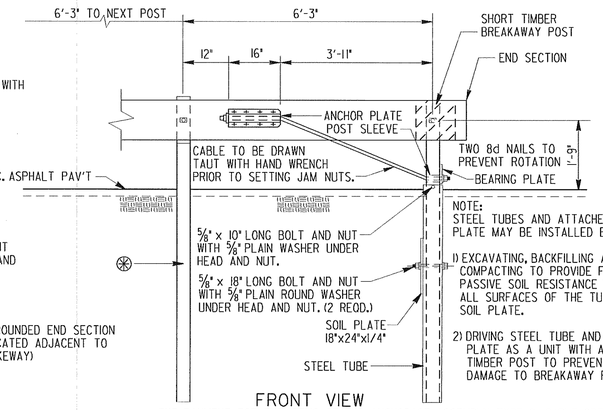

NOTE:
STEEL TUBES AND ATTACHED SOIL PLATE MAY BE INSTALLED BY:

1) EXCAVATING, BACKFILLING AND COMPACTING TO PROVIDE FULL PASSIVE SOIL RESISTANCE TO ALL SURFACES OF THE TUBE AND SOIL PLATE.

2) DRIVING STEEL TUBE AND SOIL PLATE AS A UNIT WITH A DUMMY TIMBER POST TO PREVENT DAMAGE TO BREAKAWAY POST.

FRONT VIEW

THE PAYMENT FOR THE ITEMS OF END ANCHORAGE ASSEMBLY TYPE 2 (CABLE OPTION) SHALL BE FULL COMPENSATION FOR FURNISHING AND INSTALLING EITHER THE ROUND OR THE BUFFER END SECTION, THE BEAM ANCHOR PLATE, CABLE ASSEMBLY, PIPE SLEEVE, SOIL PLATE, STEEL TUBE, BEARING PLATE, SHORT TIMBER BREAKAWAY POST, OFFSET BLOCKS AND THE NECESSARY HARDWARE.

CABLE ANCHOR OPTION

⊛TIMBER OR STEEL POST WITH TIMBER BLOCK MAY BE USED. TIMBER POST AND BLOCK SHOWN (THIS POST MUST BE TIMBER IN STEEL POST RUN OF RAIL ADJACENT TO PEDESTRIAN WAY OR BIKEWAY. TO PROVIDE ANCHORAGE FOR PIPE RAILS AS REQUIRED)

PRECAST DEADMAN (CLASS "A" CONCRETE)

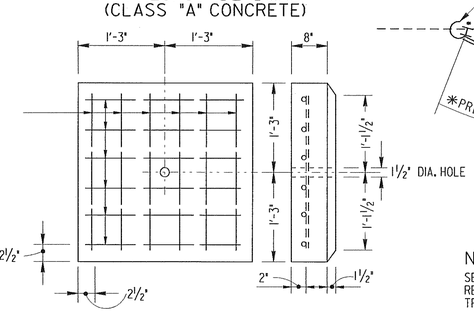

TYPE I ALTERNATE

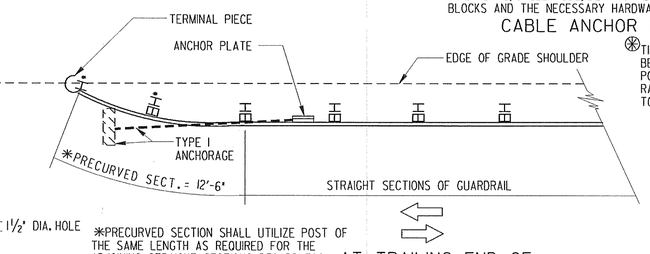

*PRECURVED SECTION SHALL UTILIZE POST OF THE SAME LENGTH AS REQUIRED FOR THE ADJOINING STRAIGHT SECTIONS, REGARDLESS OF DISTANCE TO GRADED SHOULDER EDGE.

AT TRAILING END OF TWO-WAY TRAFFIC (WHICH FALLS OUTSIDE CLEAR ZONE OF OPPOSING TRAFFIC)

NOTE:
SEE STD. 4052 OR OTHER APPLICABLE DETAILS FOR REQUIREMENT FOR TYPE 12 ANCHORAGE ON THE TRAILING END.

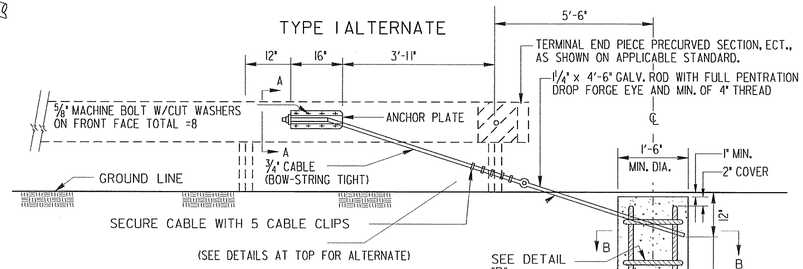

ANCHOR ROD HOOKS TO BE IN CONTACT WITH ANCHOR REINFORCEMENT WHEN CONCRETE IS PLACED.

WIRE TIES MAY BE USED TO POSITION ANCHOR ROD.

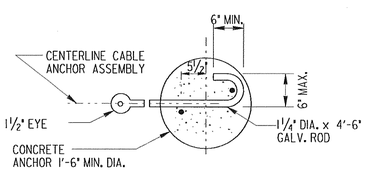

SECTION B-B

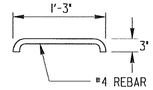

DETAIL "B"

NOTE: USE OF TYPE I ALTERNATE IS CONTRACTOR'S OPTION.

NOTE: SEE STANDARD 4012C FOR GUARDRAIL CONNECTION TO CONCRETE FACE.

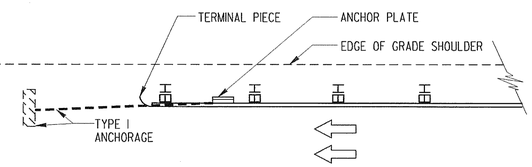

AT TRAILING END OF ONE-WAY TRAFFIC

GENERAL NOTES:

1. SPECIFICATIONS: GEORGIA STANDARD, CURRENT EDITION & SUPPLEMENTS THERE TO.
2. FOR DETAILS OF GUARDRAIL HARDWARE, POST, OTHER TYPE ANCHORAGE, LOCATION, ETC. SEE SEPARATE STANDARDS AS APPLICABLE.
3. GUARDRAIL INSTALLATIONS, INCLUDING ANCHORAGES AND CONNECTIONS, ARE TO BE COMPLETED BEFORE BEING SUBJECT TO TRAFFIC UNLESS OTHERWISE APPROVED.
4. PAYMENT FOR ANCHORAGE INCLUDES ANCHOR PLATE; 1 1/4"DIA. ROD; 3/4"CABLE; PRECAST DEADMAN (OR ALTERNATIVE) ALL ACCOMPANYING HARDWARE.

7-02	DATE	DEPARTMENT OF TRANSPORTATION STATE OF GEORGIA
ADDED CABLE ANCH. OPTION	REVISION	STANDARD GUARDRAIL ANCHORAGE TYPE I REDRAWN NOV., 1999
	BY	DES. ___ DRW. ___ TRA. ___ CHK. ___ (SUBMITTED) STATE ROAD & AIRPORT DESIGN ENGR. (APPROVED) CHIEF ENGINEER — NUMBER 4012D