STATE	PROJECT NUMBER	SHEET NO.	TOTAL SHEETS
GA.	STP-M002-00(112)	21	40

WOOD POST

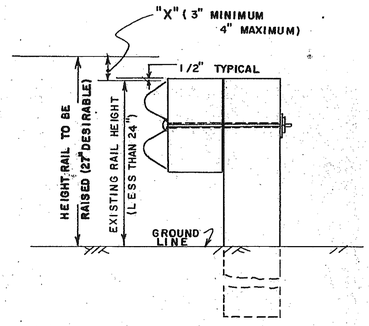

SIDE VIEW

STEP 1

DETERMINE THE DISTANCE "X" THE EXISTING RAIL IS TO BE RAISED. THIS WILL BE 3" UNLESS OTHERWISE SHOWN IN THE PLANS OR DIRECTED BY THE ENGINEER.

STEP 2 (NOT SHOWN)

REMOVE THE RAIL AND OFFSET BLOCKS LEAVE POST IN PLACE.

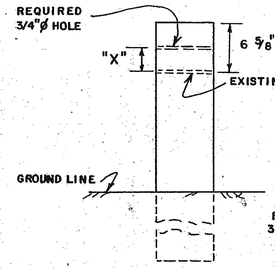

SIDE VIEW

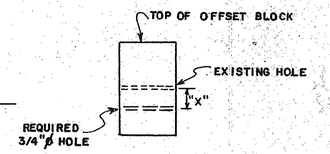

SIDE VIEW

STEP 3

DRILL HOLES IN POST CENTERED ABOVE EXISTING HOLE BY THE DISTANCE "X."
DRILL HOLES IN BLOCK CENTERED BELOW EXISTING HOLE BY THE DISTANCE "X."

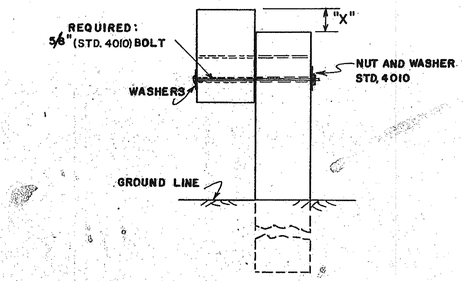

SIDE VIEW

STEP 4

RAISE OFFSET BLOCK ON POST BY CONNECTING WITH REQUIRED 5/8" DIA. BOLT. (SEE GA. STD. 4010) NUTS AND WASHERS REQUIRED AS SHOWN.

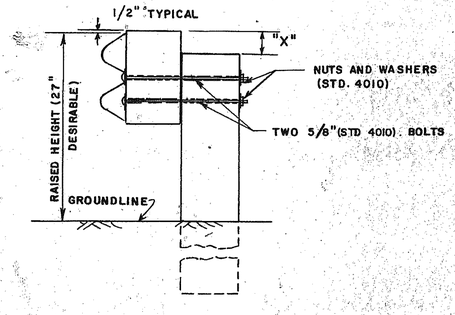

SIDE VIEW

STEP 5

RECONNECT THE REMOVED RAIL AT THE NEW HEIGHT. EACH GUARDRAIL SPLICE WILL BE CONNECTED WITH EIGHT (8) SPLICE BOLTS. SEE STANDARD 4010. ALL SPLICES TO BE LAPPED IN DIRECTION OF TRAFFIC FLOW.

STEEL POST

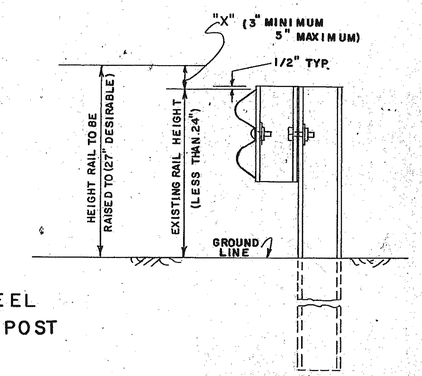

SIDE VIEW

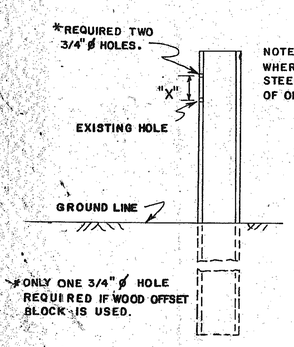

NOTE:
WHERE WOOD OFFSET BLOCKS ARE USED WITH STEEL POST, SEE DETAIL ABOVE FOR DRILLING OF OFFSET BLOCK.

SIDE VIEW

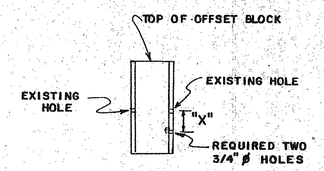

SIDE VIEW

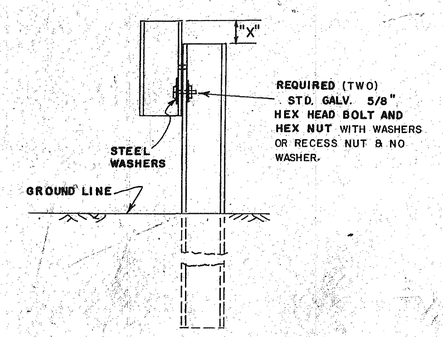

SIDE VIEW

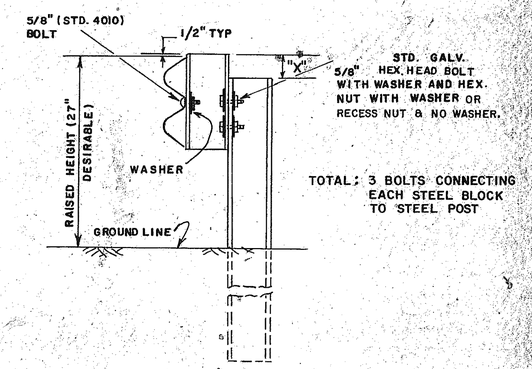

SIDE VIEW

GENERAL NOTES:

1. SPECIFICATIONS: GA. STANDARD, CURRENT EDITION & SUPPLEMENTS THERETO.
2. SEE GA. STANDARD 4010 FOR DETAILS OF NUTS, BOLTS, WASHERS, ETC.
3. REMOVED MATERIALS WHICH ARE UNDAMAGED ARE TO BE REUSED. ADDITIONAL MATERIALS INCLUDE BOLT(S) REQUIRED IN STEP 4, MATERIALS LOST OR DAMAGED IN THE OPERATION, AND/OR ADDITIONAL POST & OFFSET BLOCKS, IF NEEDED, TO MAKE INSTALLATION COMPLY WITH CURRENT STANDARDS.
4. ALTERNATE: WHERE EXISTING INSTALLATION HAS 12'-6" POST SPACINGS, THE POST MAY BE JACKED UP TO GIVE STANDARD RAIL HEIGHT WITH ADDITIONAL POST INSTALLED TO GIVE A 6'-3" POST SPACING (OR REDUCED POST SPACING, WHERE SPECIFIED).
5. RAIL SPLICES WILL BE LAPPED IN DIRECTION OF TRAFFIC FLOW.
6. ANY DAMAGE TO GALVANIZED COATINGS SHALL BE REPAIRED WITH GALVANIZING REPAIR COMPOUND.
7. PAYMENT FOR ADJUSTING GUARDRAIL TO GRADE — PER LIN. FT. INCLUDES ALL HARDWARE, ADDITIONAL POST & OFFSET BLOCKS, WHERE NEEDED, OR OTHER MATERIALS NECESSARY TO MAKE INSTALLATION COMPLY WITH CURRENT STANDARDS.

NO.	REVISION	BY	DATE

REVISED & REDRAWN 1/88

CONSTRUCTION DETAILS

ADJUSTING GUARDRAIL TO GRADE

NO SCALE

FORM EF00003