STATE	PROJECT NUMBER	SHEET NO.	TOTAL SHEETS
GA.	STP-M002-00 (112)	20	40

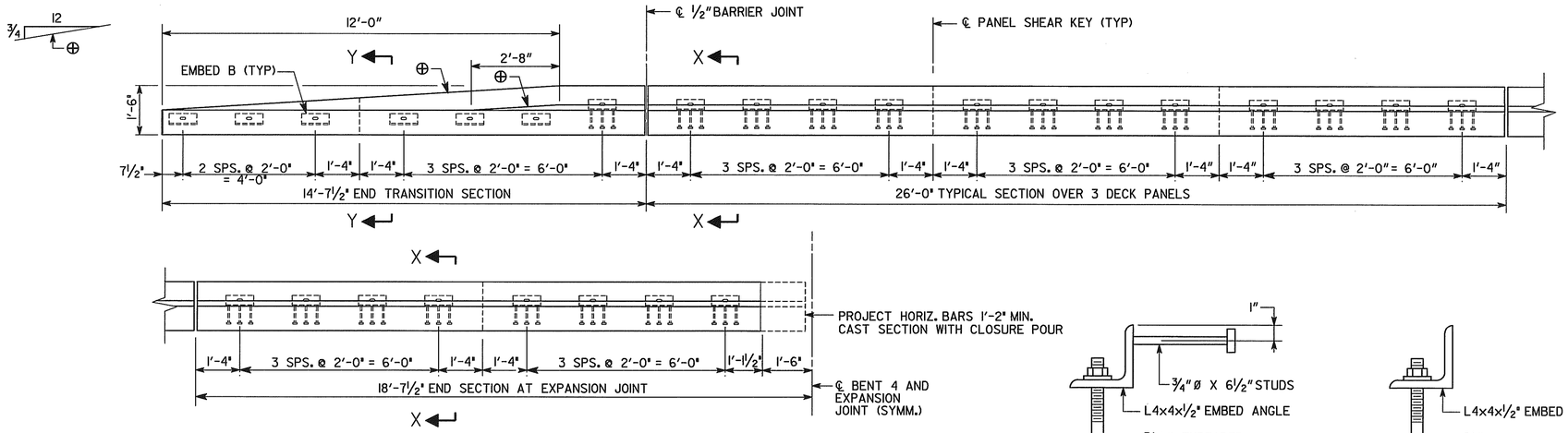

PRECAST BARRIER PLAN

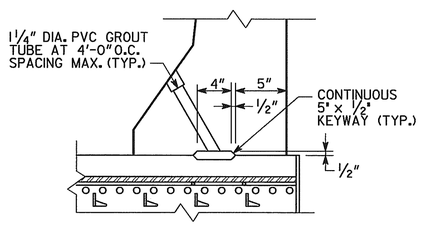

GROUT TUBE & SHEAR KEY DETAIL

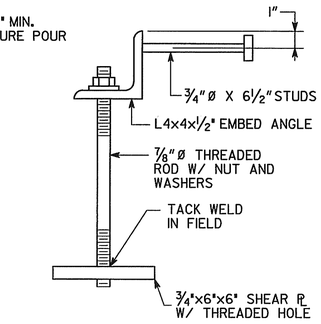

SECTION

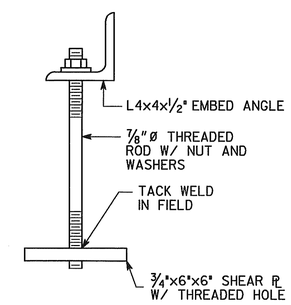

SECTION

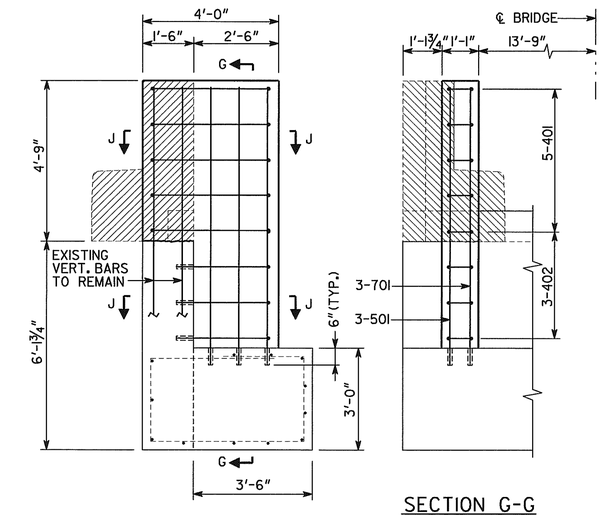

SECTION F-F

SECTION G-G

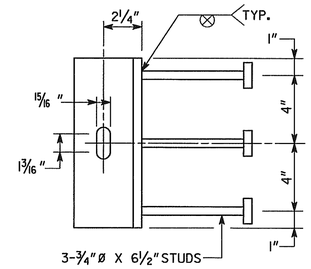

PLAN

EMBED ANGLE A

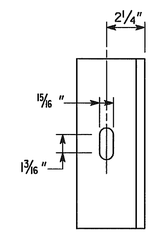

PLAN

EMBED ANGLE B

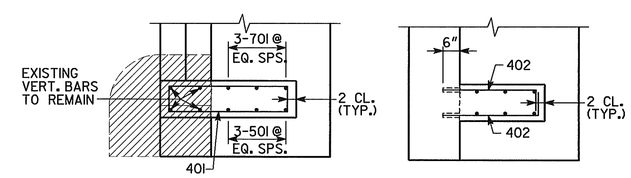

SECTION H-H

SECTION J-J

ENDPOST DETAILS

** AT FABRICATOR'S OPTION, 10" RADIUS MAY BE REPLACED BY STRAIGHT INTERSECTING SLOPES.

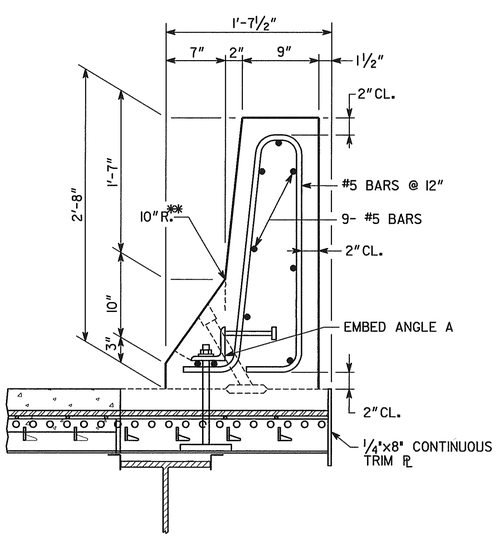

SECTION X-X

* TAPERS TO 0" AT END POST

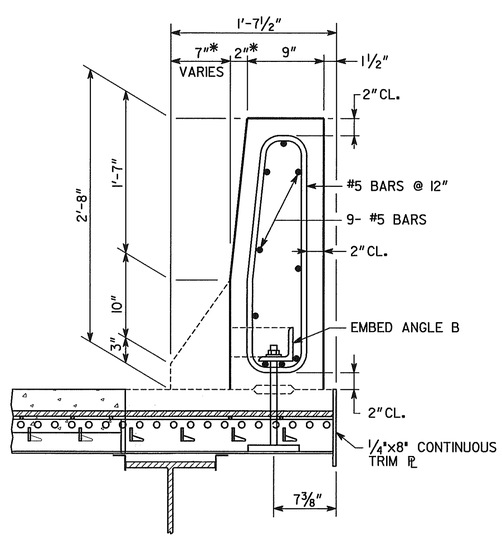

SECTION Y-Y

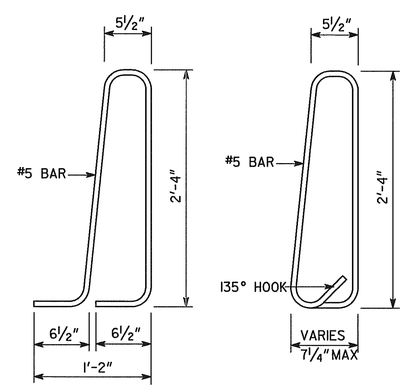

BAR DETAILS

NOTES:

1. STRUCTURAL STEEL FOR THREADED RODS AND SHEAR STUDS SHALL BE ASTM A709, GRADE 36. ALL OTHER STEEL SHALL BE ASTM A992, GRADE 50, GALVANIZED.

BRIDGE NO. 2

J.B. TRIMBLE, INC.
6445 Powers Ferry Rd.
Atlanta GA 30339
(770) 952-1022

GEORGIA
DEPARTMENT OF TRANSPORTATION
OPERATIONS DIVISION-OFFICE OF MAINTENANCE

DISTRICT 1 BRIDGE REPAIR (DECK REPLACEMENT)
S.R. 11 (BELLS MILL BRIDGE) OVER
EAST FORK LITTLE RIVER
PRECAST BARRIER DETAILS

HALL COUNTY — STP-M002-00 (112)

SCALE: AS SHOWN — APRIL 2004

BY	REVISIONS	DATE

DESIGNED MDT — CHECKED GLE — REVIEWED EHG
DRAWN ITD — DESIGN GROUP MAINTENANCE — APPROVED STH

BRIDGE SHEET 7 OF 7