STATE	PROJECT NUMBER	SHEET NO.	TOTAL SHEETS
GA.	STP-M002-00 (112)	19	40

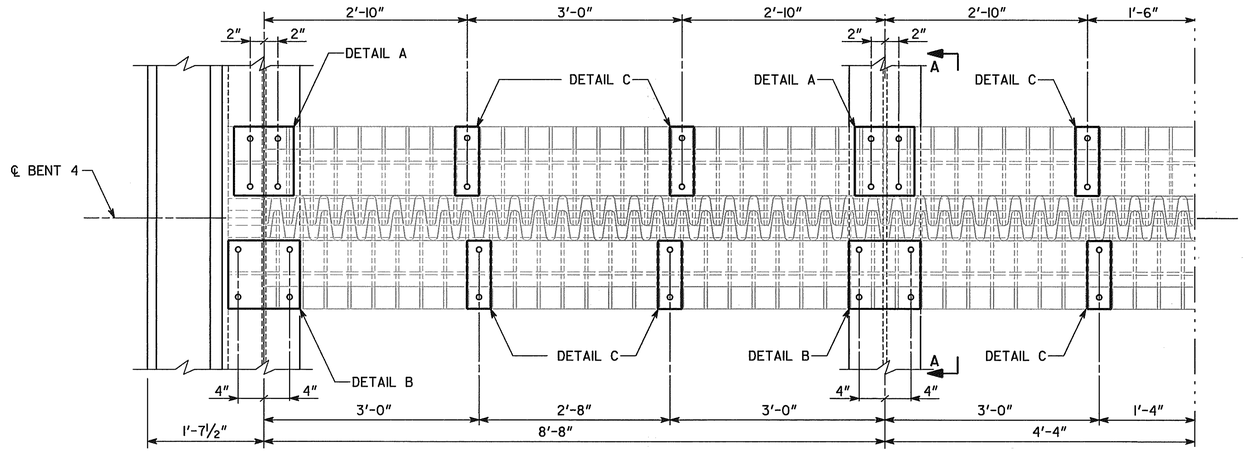

PLAN

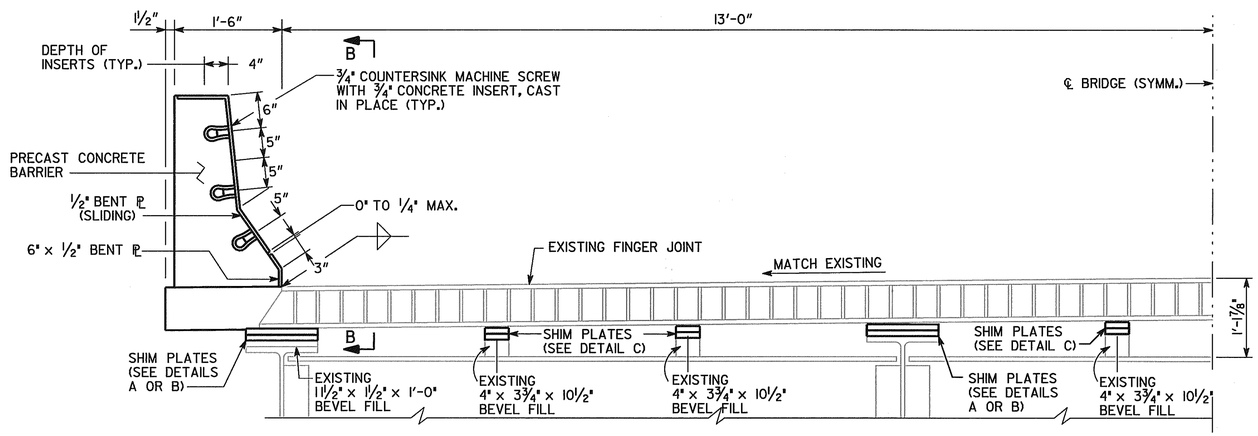

SECTION

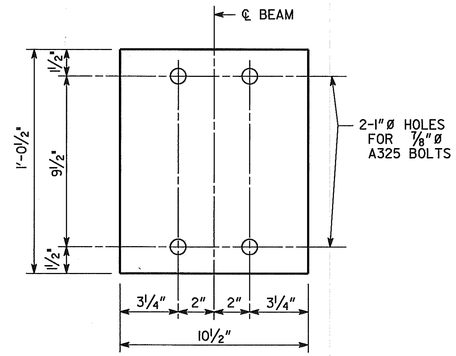

SHIM PLATE- DETAIL A

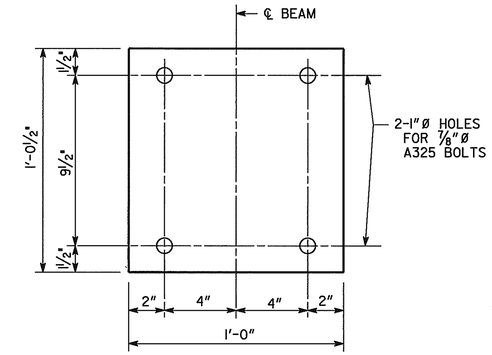

SHIM PLATE- DETAIL B

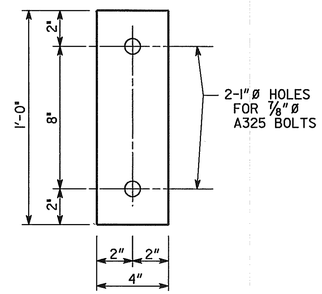

SHIM PLATE- DETAIL C

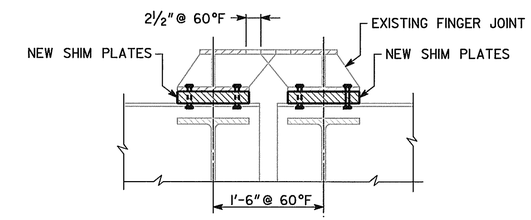

SECTION A-A

NOTES:

1. PROVIDE SHIM PLATES OF VARYING THICKNESS (1/2" MIN.) TO ALLOW FOR ADJUSTMENT OF FINGER JOINT ASSEMBLY IN THE FIELD.
2. THE EXISTING FINGER JOINT ASSEMBLY SHALL BE CLEANED PRIOR TO RESETTING. ANY DAMAGE TO THE EXISTING FINGER JOINT ASSEMBLY SHALL BE REPAIRED. THIS WORK SHALL BE DONE TO THE SATISFACTION OF THE ENGINEER, AT NO ADDITIONAL COST TO THE DEPARTMENT.
3. PROVIDE NEW A325 BOLTS LONG ENOUGH TO ACCOMMODATE ADDITIONAL SHIM PLATE DEPTH AND EXISTING MEMBERS.
4. ALL STRUCTURAL STEEL SHALL BE A709, GRADE 36.

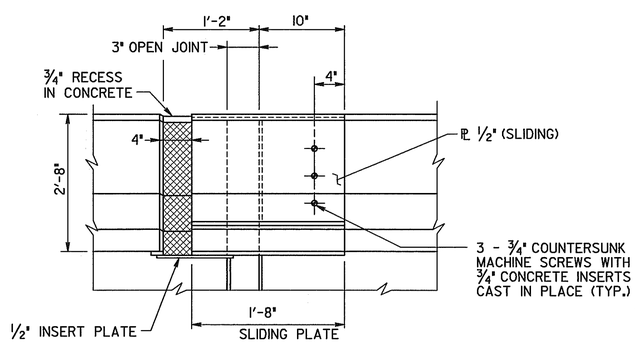

SECTION B-B

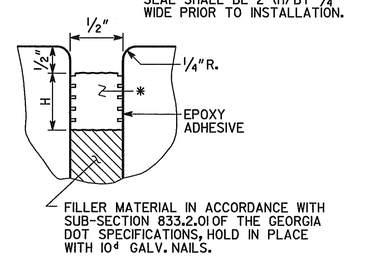

END BENT JOINT DETAILS

(BENTS 1 & 7)

REINFORCING SCHEDULE

LOCATION	NO. OF LOC.	MARK	LENGTH FT.	LENGTH IN.	NO. BARS REQ'D.	TYPE	A	G	B FT.	B IN.	C FT.	C IN.	D FT.	D IN.	θ
BENT 1 & 7	2														
		400	27	2	4	1									
		401	10	2	10	25	3	3	3	8	0	9			
		402	3	7	12	3			2	10	0	9			
		500	1	4	29	2			0	6	0	10			
		501	7	9	6	1									
		701	7	9	6	1									

BRIDGE NO. 2

J.B. TRIMBLE, INC.
6445 Powers Ferry Rd.
Atlanta GA 30339
(770) 952-1022

GEORGIA
DEPARTMENT OF TRANSPORTATION
OPERATIONS DIVISION-OFFICE OF MAINTENANCE

DISTRICT 1 BRIDGE REPAIR (DECK REPLACEMENT)
S.R. 11 (BELLS MILL BRIDGE) OVER
EAST FORK LITTLE RIVER
FINGER JOINT

HALL COUNTY STP-M002-00 (112)

SCALE: AS SHOWN APRIL 2004

BY	REVISIONS	DATE

BRIDGE SHEET 6 OF 7

DESIGNED MDT | CHECKED GLE | REVIEWED EHG
DRAWN ITD | DESIGN GROUP MAINTENANCE | APPROVED STH

k:\tra\31-3029 bridge deck repairs\stp-m002-00(112) hall county (lake lanier)\bells mill bridge\dgn\112b2jt.dgn 6/10/2004

...\dgn\112b21.dgn 6/10/2004 4:25:32 PM