STATE	PROJECT NUMBER	SHEET NO.	TOTAL SHEETS
GA.	STP-M002-00 (112)	11	40

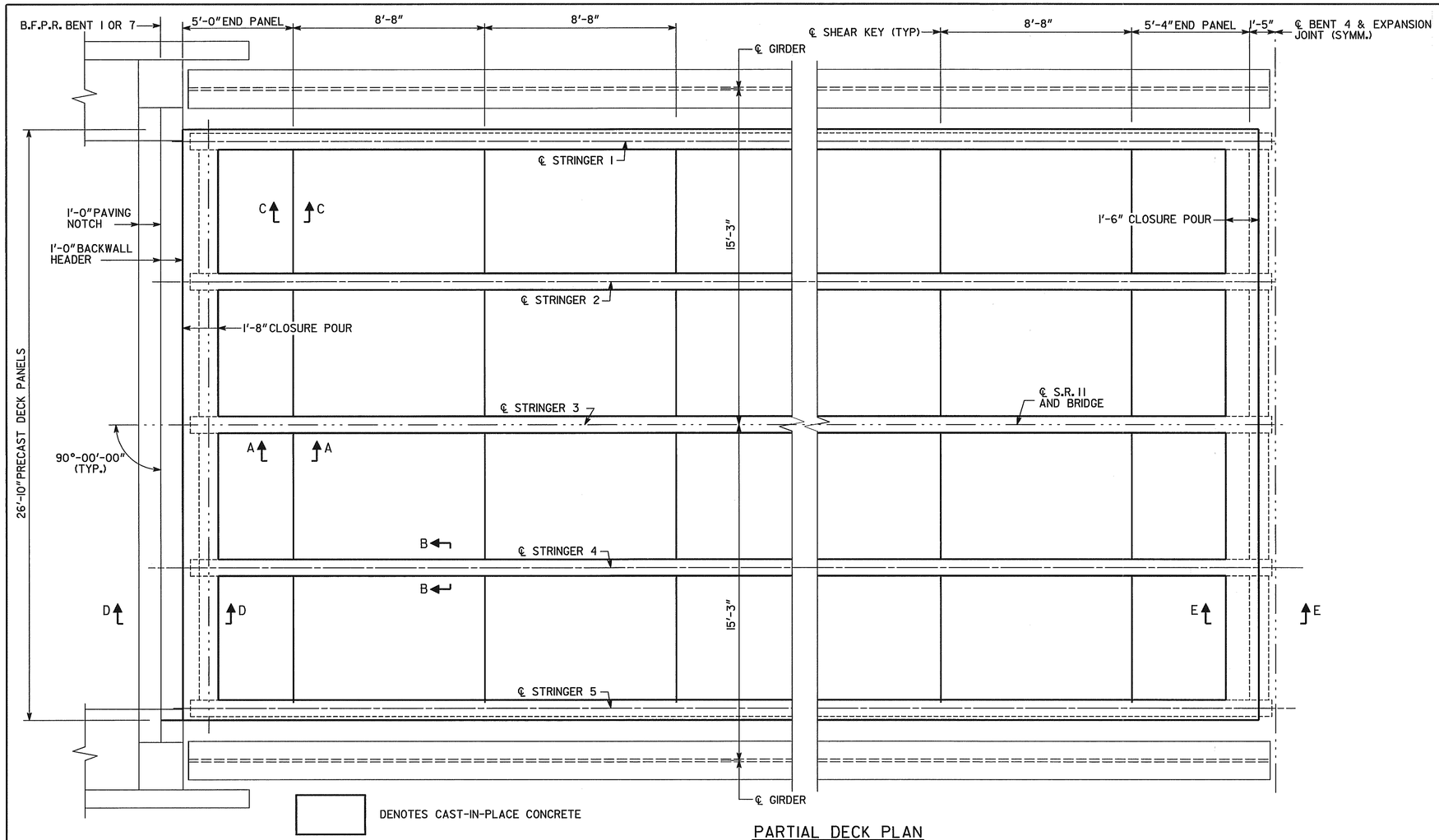

PARTIAL DECK PLAN

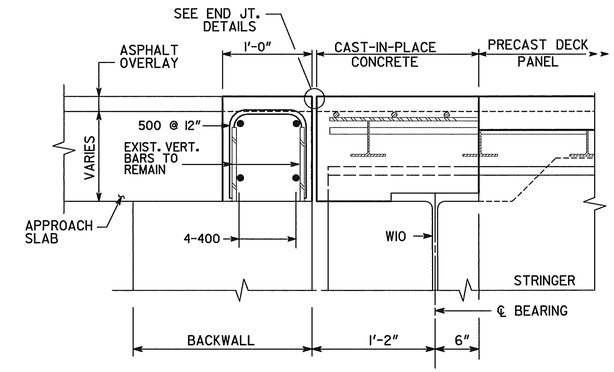

SECTION D-D

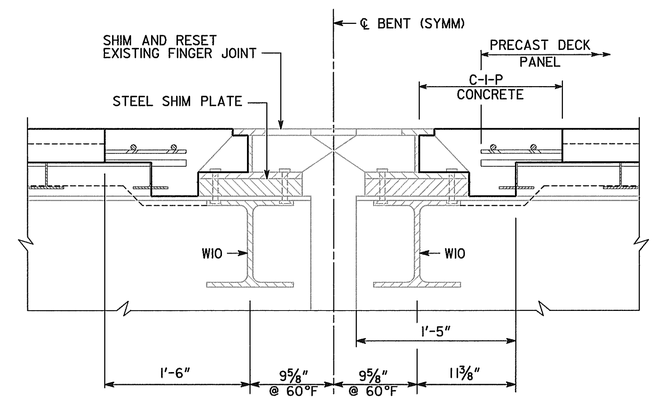

SECTION E-E

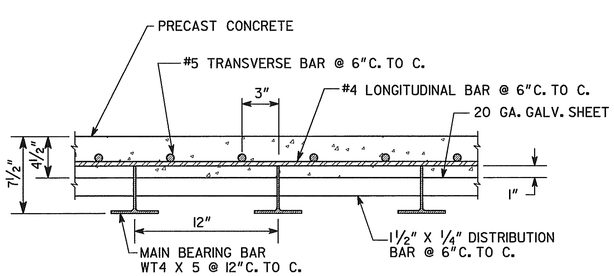

NOTE: REBAR LAYOUT SHALL BE AS SHOWN IN ORDER TO ALLOW MAXIMUM CLEARANCE FOR ATTACHMENT OF SHEAR STUDS TO FLANGES AND ADJUSTMENT OF LEVELING BOLTS. PROVIDE A MINIMUM CLEARANCE OF 1" BETWEEN TOP OF MAIN BEARING BARS AND TOP TRANSVERSE BARS. ALL REBAR SHALL BE EPOXY COATED.

SECTION A-A

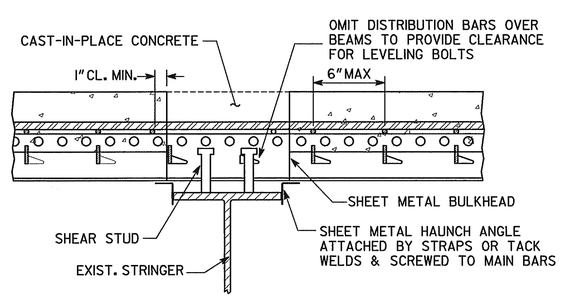

SECTION B-B
(LEVELING BOLTS NOT SHOWN)

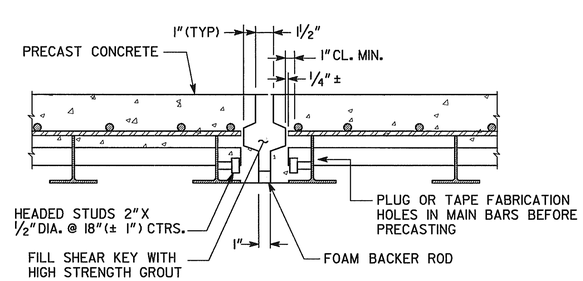

SECTION C-C

BRIDGE NO. 1

J.B. TRIMBLE, INC.
6445 Powers Ferry Rd.
Atlanta GA 30339
(770) 952-1022

GEORGIA
DEPARTMENT OF TRANSPORTATION
OPERATIONS DIVISION-OFFICE OF MAINTENANCE

DISTRICT 1 BRIDGE REPAIR (DECK REPLACEMENT)
S.R. 11/U.S. 129 (LONGSTREET BRIDGE) OVER
CHATTAHOOCHEE RIVER
PRECAST DECK DETAILS

HALL COUNTY STP-M002-00 (112)

SCALE: AS SHOWN APRIL 2004

BY	REVISIONS	DATE

BRIDGE SHEET 4 OF 6

DESIGNED PJC | CHECKED GLE | REVIEWED EHG
DRAWN ITD | DESIGN GROUP MAINTENANCE | APPROVED STH

6/10/2004

k:\tra\3l-3029 bridge deck repairs\stp-m002-00(112) hall county (lake lanier)\longstreet bridge\dgn\112blpd.dgn

...\dgn\112blpd.dgn 6/10/2004 4:25:28 PM