STATE	PROJECT NUMBER	SHEET NO.	TOTAL SHEETS
GA.	NHS-M002-00(52)	13B	15

Metric

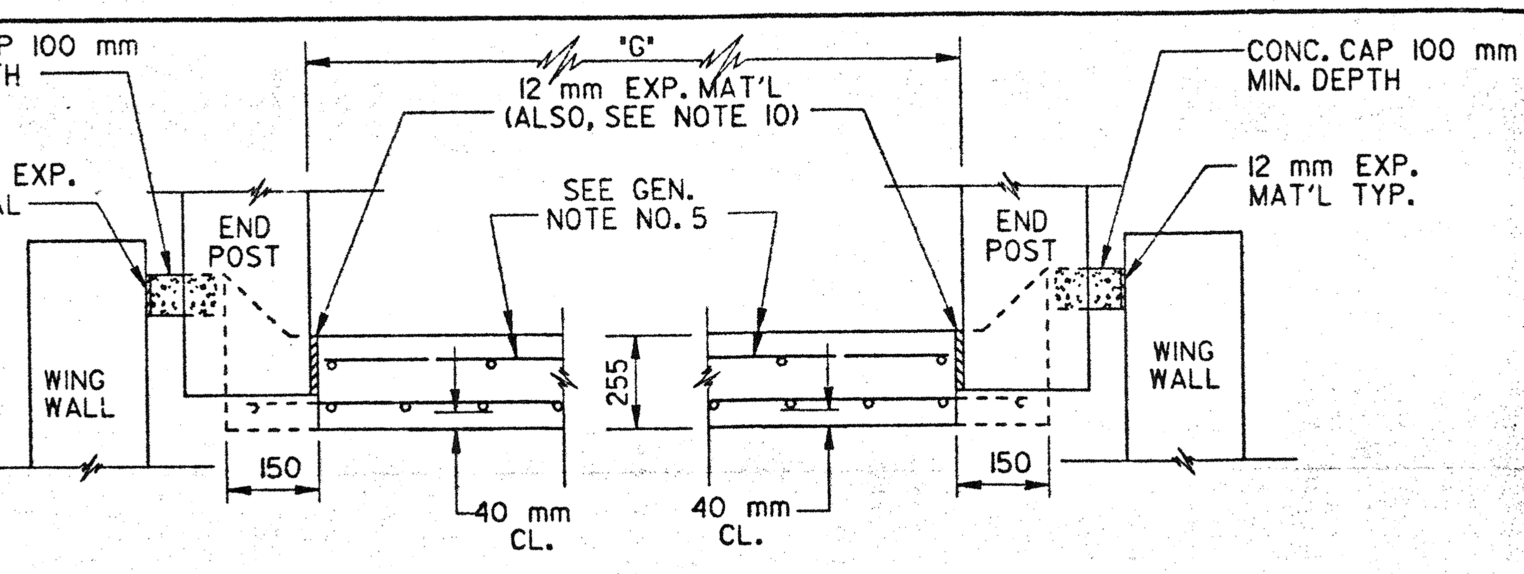

SECTION B-B   SECTION C-C

NOTE: WHERE END POST INTERSECTS APPROACH SLAB, THE INTERCEPTED REINFORCING, BOTH LONGITUDINAL & TRAVERSE, SHALL BE SHORTENED AS NEEDED TO GIVE 75 mm ± CLEARANCE TO END POST.

SEE DETAIL 'A'
SEE GEN. NOTE NO.3

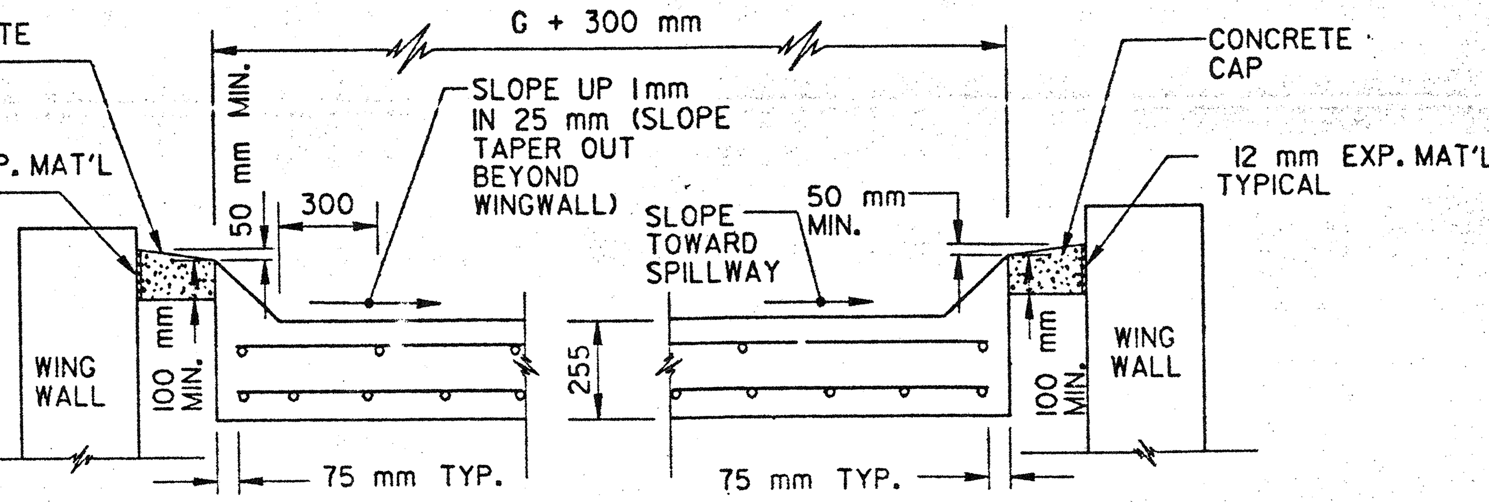

SECTION D-D
(SHOWN WHERE SPILLWAY IS NOT REQ'D.)

SECTION E-E
(SHOWN WHERE SPILLWAY IS REQ'D.)

NOTE: BLOCKOUTS ARE OMITTED WHERE IT HAS BEEN VERIFIED THAT GUARDRAIL WILL NOT BE REQ'D.

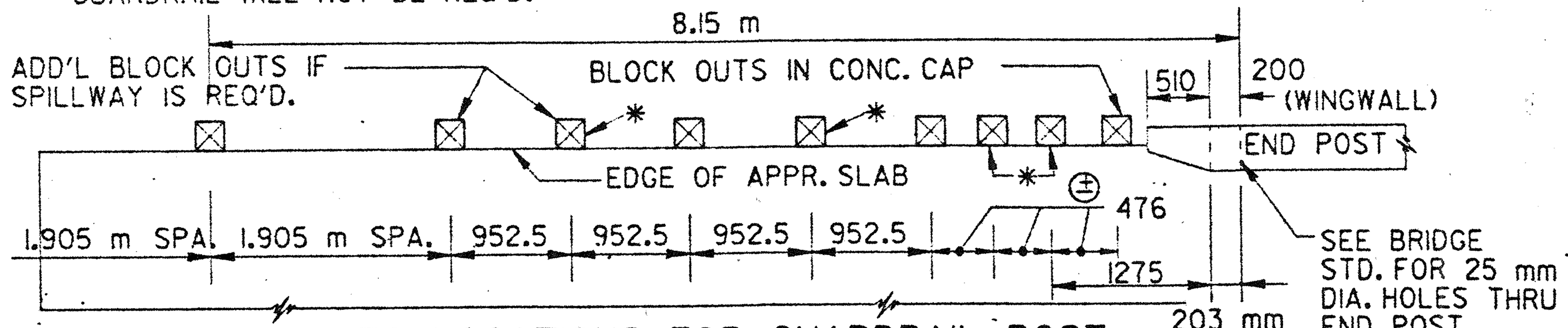

BLOCKOUTS LOCATIONS FOR GUARDRAIL POST

✱ IF GUARDRAIL IS WARRANTED AT THE TRAILING END OF 4 OR MORE LANES, BLOCKOUTS FLAGGED WITH AN ASTERISK ARE OMITTED.

SEE GENERAL NOTE NO. 3

㊉ VARIED TO MISS BRIDGE PAV. REST

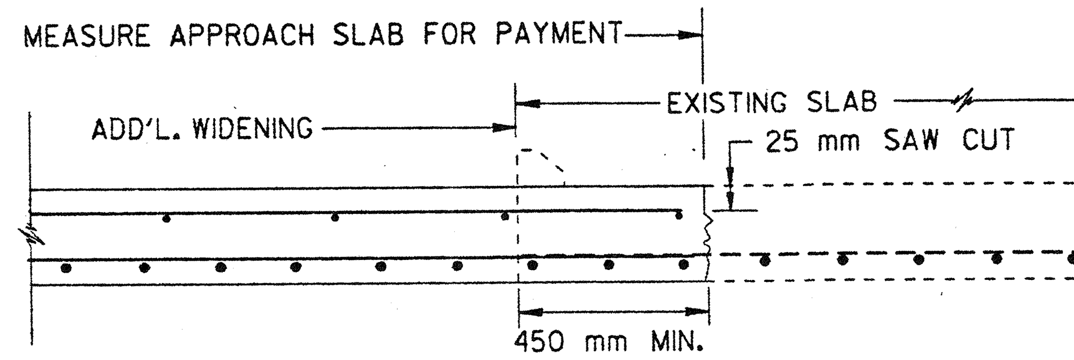

NEW TO EXISTING APPROACH SLAB CONNECTION

REMOVE CONCRETE FROM 450 mm STRIP WITH CARE TO MAKE CUT AS VERTICAL AS POSSIBLE. EXPOSED BARS TO BE CUT AND BENT TO FIT, ALL SCALE AND RUST REMOVED. EPOXY IS REQUIRED BETWEEN NEW AND EXISTING CONCRETE. EXISTING REINFORCING SHALL EXTEND 375 mm MIN. INTO NEW SECTION. PAYMENT FOR NEW SLAB INCLUDES ALL WORK HEREIN DESCRIBED.

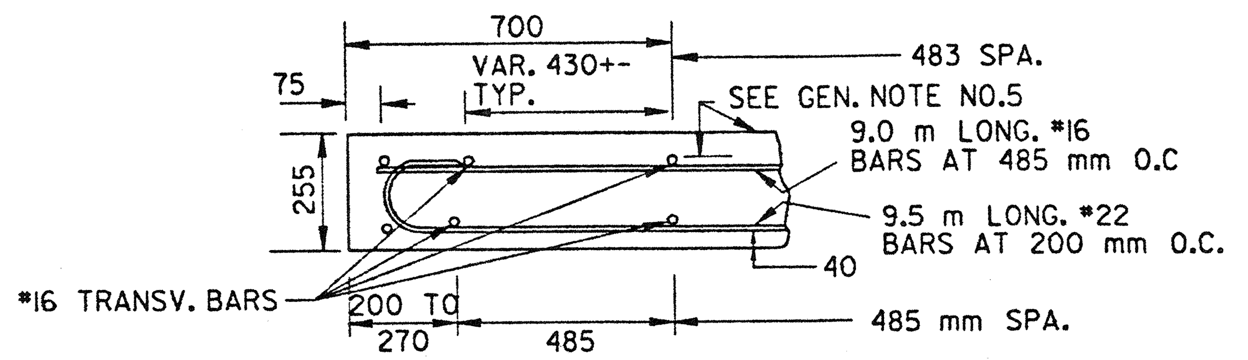

TYPICAL LONGITUDINAL END VIEW

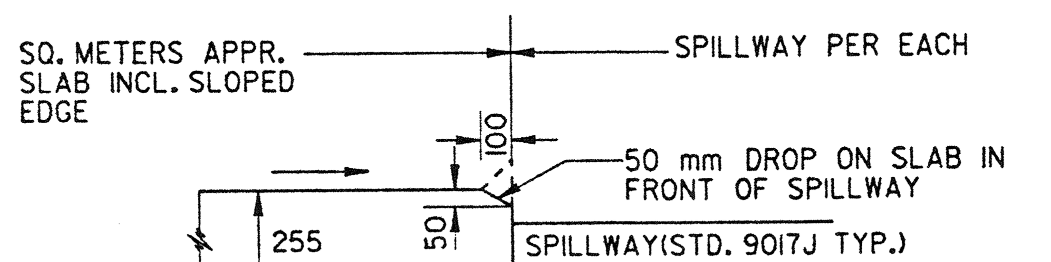

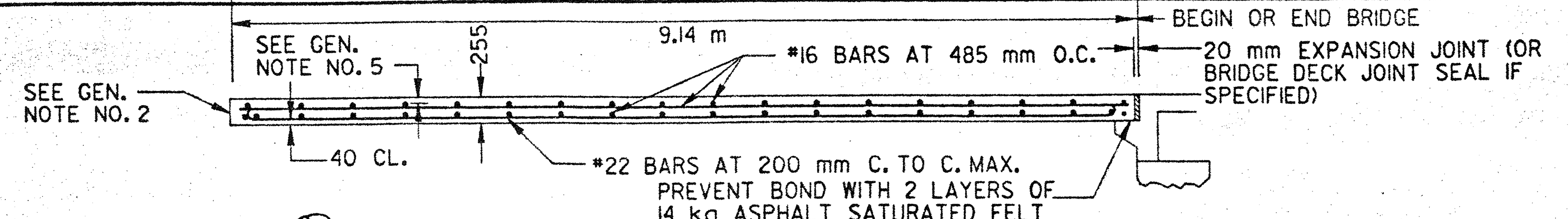

LONGITUDINAL ℄ SECTION

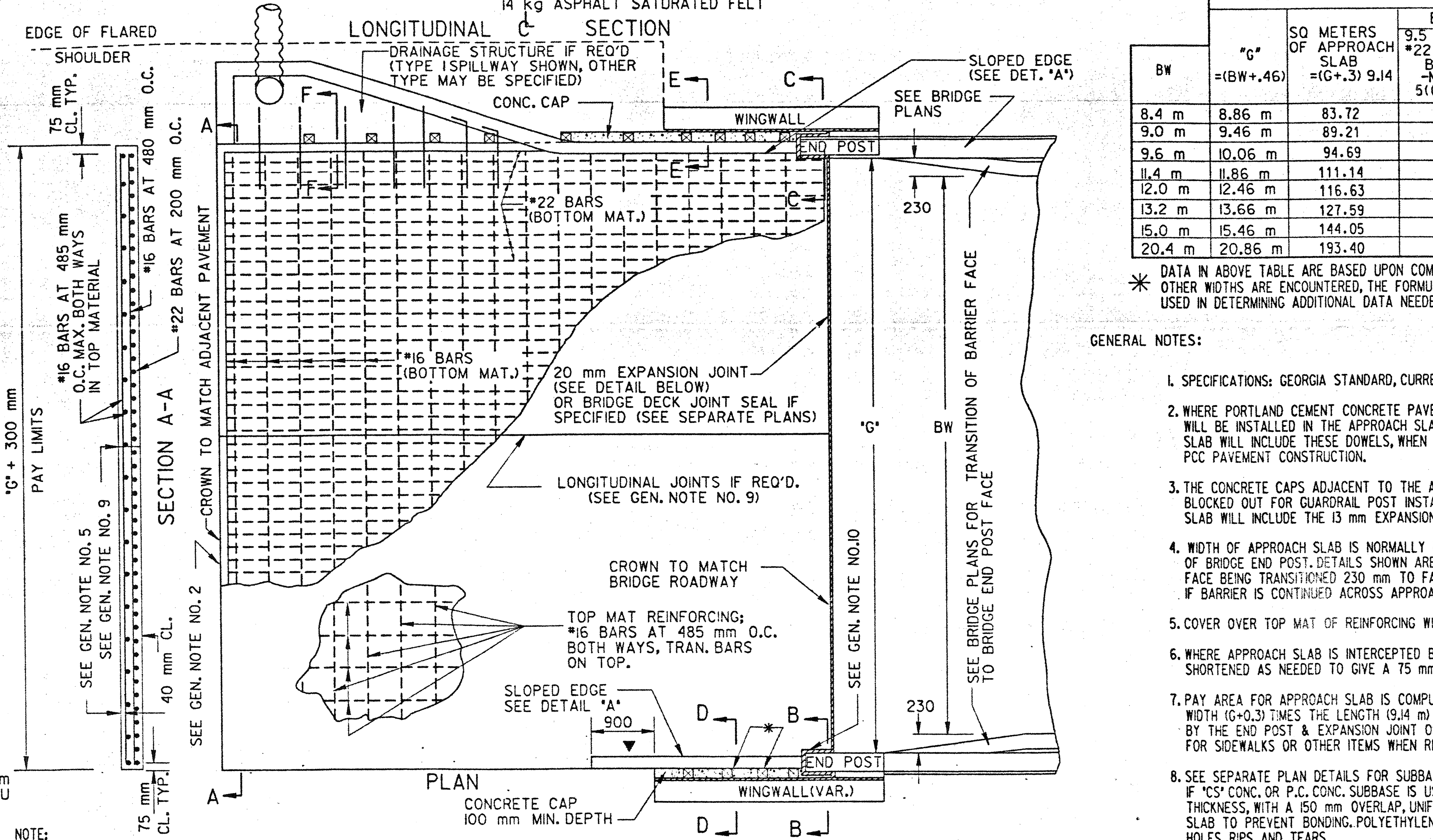

PLAN

NOTE:
PLAN VIEW IS PRESENTED WITH A TYPE 1 SPILLWAY ON ONE SIDE AND NO DRAINAGE STRUCTURE ON THE OTHER SIDE. SPILLWAY, WHERE REQUIRED, MAY BE TYPE 1,2,3 OR 4 AND ON BOTH SIDES OF APPROACH SLAB, ON JUST ONE SIDE, OR NO SPILLWAY, AS CONDITIONS WARRANT. APPROACH SLAB QUANTITIES AND PAY ITEM WILL NOT BE EFFECTED BY SPILLWAY REQUIREMENTS. SLOPED EDGE IS REQUIRED BOTH WITH AND WITHOUT SPILLWAY.

▼ SLOPED EDGE SHALL BE CONSTRUCTED MONOLITHIC WITH APPROACH SLAB. SLOPED EDGE SHALL BE TAPERED OUT BEYOND WINGWALL, EXCEPT WHERE BRIDGE DRAINAGE MUST BE CARRIED ACROSS SLAB TO ROADWAY STRUCTURE, SLOPED EDGE SHALL THEN RUN FULL LENGTH OF SLAB.

✱ WITHOUT SPILLWAY, NUIMBER OF BLOCKOUTS VARY ACCORDING TO LENGTH OF WINGWALL

SKEWED SLAB: LONGITUDINAL BARS-NOMINAL LENGTH AND NUMBER REQUIRED SAME AS FOR UNSKEWED SLAB.

TRANSVERSE BARS-NUMBER REQUIRED SAME AS FOR UNSKEWED SLAB. NOMINAL LENGTH OF SKEWED= UNSKEWED NOMINAL LENGTH DIVIDED BY SIN θ.

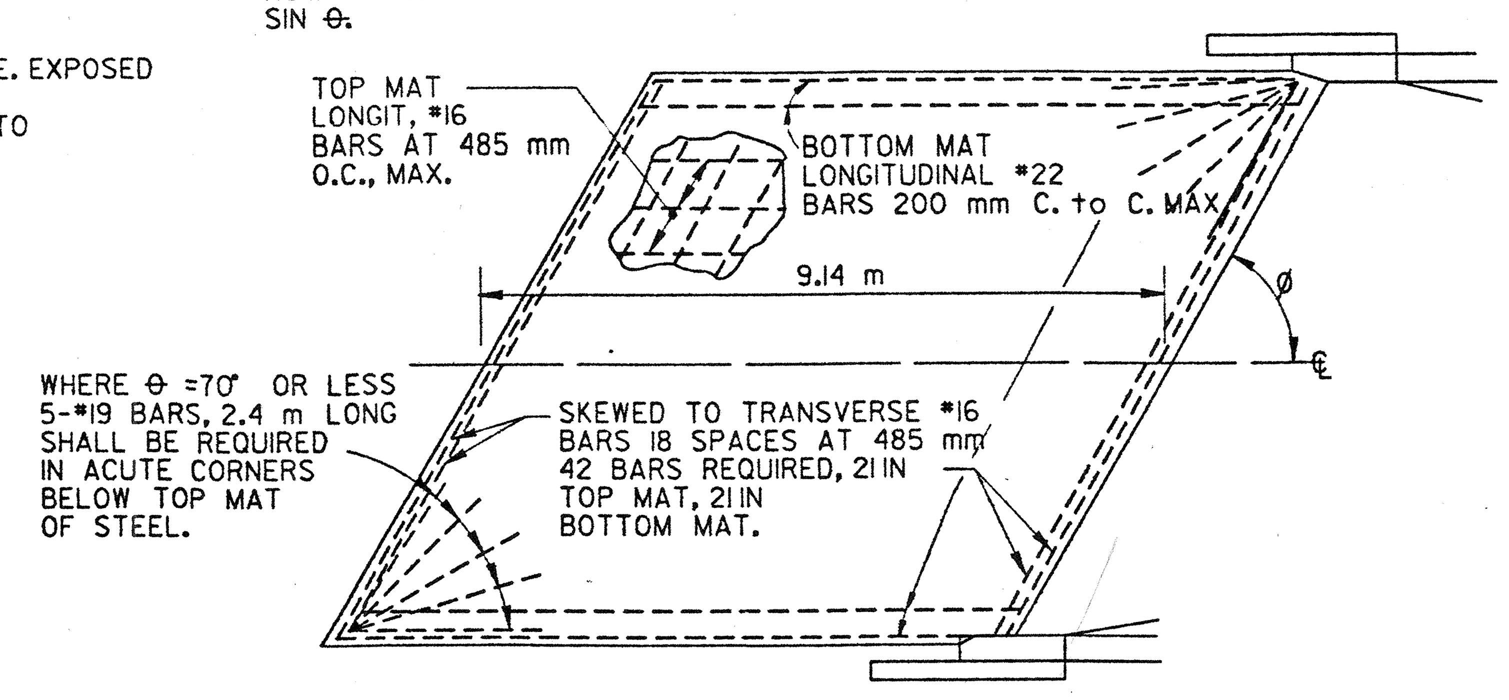

SKEW MODIFICATION SKETCH

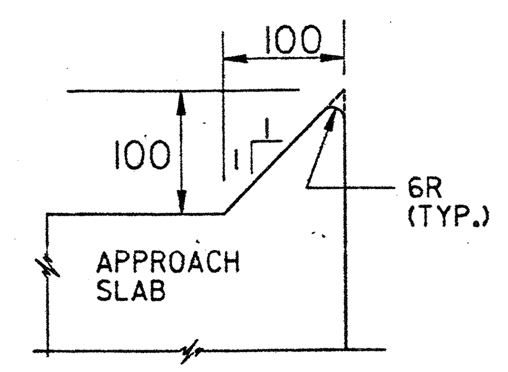

DETAIL "A"

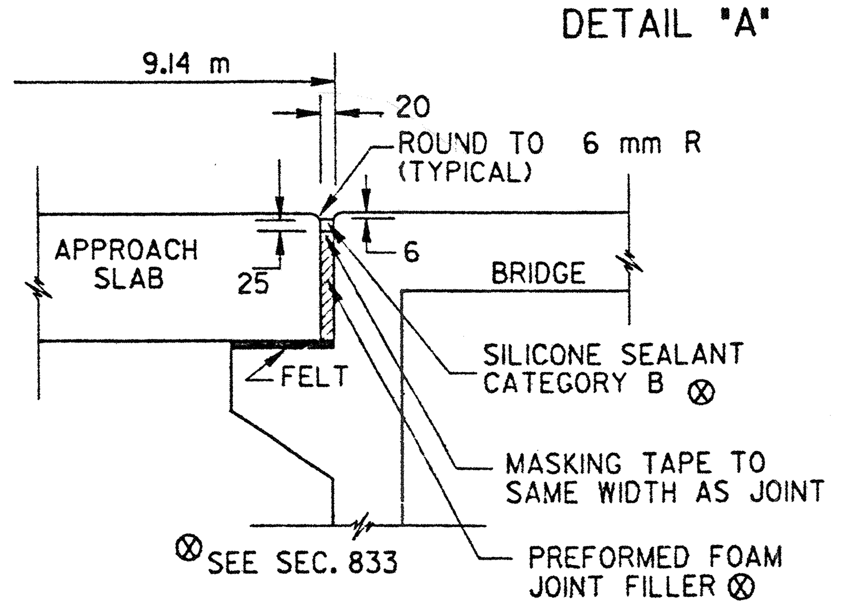

EXPANSION JOINT DETAIL

THE EXPANSION JOINT SHOWN ABOVE IS REQUIRED BETWEEN APPROACH SLAB & BRIDGE AT ALL LOCATIONS, EXCEPT WHERE BRIDGE DECK JOINT SEAL (SEPARATE PLAN DETAILS) IS SPECIFIED.

BW	"G" =(BW+.46)	SQ METERS OF APPROACH SLAB =(G+.3) 9.14	BOTTOM MAT REINF. 9.5 m LONG #22 LONGIT. BARS -NUMBER- 5(G+.15)+1	BOTTOM MAT REINF. 21- #16 TRANS BARS -LENGTH- =(G+.15 m)	TOP MAT REINF. 9.0 m LONG #16 BARS -NUMBER- =(G+.15 m)/.48 +1	TOP MAT REINF. 21- #16 TRANS BARS -LENGTH- =(G+.15 m)
8.4 m	8.86 m	83.72	46	9.01 m	20	9.01 m
9.0 m	9.46 m	89.21	49	9.61 m	21	9.61 m
9.6 m	10.06 m	94.69	52	10.21 m	23	10.21 m
11.4 m	11.86 m	111.14	61	12.01 m	26	12.01 m
12.0 m	12.46 m	116.63	64	12.61 m	28	12.61 m
13.2 m	13.66 m	127.59	70	13.81 m	30	13.81 m
15.0 m	15.46 m	144.05	76	15.61 m	34	15.61 m
20.4 m	20.86 m	193.40	106	21.01 m	45	21.01 m

QUANTITIES & REINFORCEMENT FOR TYPICAL SLAB SIZES ✱✱

✱ DATA IN ABOVE TABLE ARE BASED UPON COMMON SLAB/ BRIDGE WIDTHS. WHERE OTHER WIDTHS ARE ENCOUNTERED, THE FORMULAE AT COLUMN TOPS MAY BE USED IN DETERMINING ADDITIONAL DATA NEEDED.

GENERAL NOTES:

1. SPECIFICATIONS: GEORGIA STANDARD, CURRENT EDITION, AND SUPPLEMENTS THERETO.

2. WHERE PORTLAND CEMENT CONCRETE PAVEMENT IS TO BE USED FOR ROADWAY PAVING, DOWEL BARS WILL BE INSTALLED IN THE APPROACH SLAB PER STANDARD 5046-H. PAYMENT FOR THE APPROACH SLAB WILL INCLUDE THESE DOWELS, WHEN THE APPROACH SLAB IS CONSTRUCTED BEFORE THE PCC PAVEMENT CONSTRUCTION.

3. THE CONCRETE CAPS ADJACENT TO THE APPROACH SLAB WILL HAVE HOLES APPROXIMATELY 230 mm x 230 mm, BLOCKED OUT FOR GUARDRAIL POST INSTALLATIONS (SEE DETAIL). PAYMENT FOR APPROACH SLAB WILL INCLUDE THE 13 mm EXPANSION MATERIAL AND THE CAPS WITH THE BLOCKED OUT HOLES.

4. WIDTH OF APPROACH SLAB IS NORMALLY DETERMINED BY DISTANCE BETWEEN FACES OF BRIDGE END POST. DETAILS SHOWN ARE BASED UPON THE BRIDGE BARRIER FACE BEING TRANSITIONED 230 mm TO FACE OF END POST ON EACH SIDE. SEE BRIDGE PLANS. IF BARRIER IS CONTINUED ACROSS APPROACH SLAB INSTEAD, SEE STANDARD 9017-N.

5. COVER OVER TOP MAT OF REINFORCING WILL MATCH THAT OF THE BRIDGE DECK.

6. WHERE APPROACH SLAB IS INTERCEPTED BY THE BRIDGE END POST, EXTERIOR BARS WILL BE SHORTENED AS NEEDED TO GIVE A 75 mm CLEARANCE TO STRUCTURE.

7. PAY AREA FOR APPROACH SLAB IS COMPUTED AS A PRODUCT OF THE OVERALL SLAB WIDTH (G+0.3) TIMES THE LENGTH (9.14 m) WITH NO DEDUCTIONS MADE FOR AREAS OCCUPIED BY THE END POST & EXPANSION JOINT OR BY DRAINAGE STRUCTURES, AND NO ADDITIONS MADE FOR SIDEWALKS OR OTHER ITEMS WHEN REQUIRED WITH THE APPROACH SLAB.

8. SEE SEPARATE PLAN DETAILS FOR SUBBASE OR OTHER MATERIALS UNDER THE APPROACH SLAB. IF 'CS' CONC. OR P.C. CONC. SUBBASE IS USED, CLEAR POLYETHYLENE SHEETING 0.2 mm MIN. THICKNESS, WITH A 150 mm OVERLAP, UNIFORMLY LAYED SHALL BE REQUIRED UNDER THE APPROACH SLAB TO PREVENT BONDING. POLYETHYLENE SHEETING SHALL BE NEW, UNUSED AND FREE OF HOLES, RIPS AND TEARS.

9. ALL APPROACH SLABS EXCEEDING 12.6 m IN WIDTH WILL CONTAIN A LONGITUDINAL CONSTRUCTION JOINT. SLABS EXCEEDING 18.0 m AND 27.0 m IN WIDTH SHALL CONTAIN 2 AND 3 LONGITUDINAL CONSTRUCTION JOINTS RESPECTIVELY. EDGE SHALL NOT BE LESS THAN 3.5 m OR MORE THAN 10 m WIDE. REINFORCEMENT STEEL REMAINS UNCHANGED AND SHALL EXTEND THRU JOINTS. JOINTS SHALL BE LOCATED AT LANE LINES TO PROVIDE OFFSET FROM WHEEL PATHS.

10. IF BRIDGE DECK JOINT SEAL IS USED BETWEEN APPROACH SLAB AND BRIDGE, THE END OF SLAB ADJACENT TO END POST WILL BE SEALED WITH LOW MODULUS SILICONE SEALANT.

REBAR SIZES ARE PER ASTM A615M,
SI UNITS. EQUIVALENT U.S. STANDARD
SIZE AND/OR EQUAL STEEL AREAS WILL BE ALLOWED.

NOTE:
DIMENSIONS ARE IN MILLIMETERS UNLESS SPECIFIED OTHERWISE.

DATE	REVISION	BY
09-24-97	APPROACH SLAB QUANTITIES	RMU
1-7-97	REVISED METRIC REINFORCING	RMU

DEPARTMENT OF TRANSPORTATION
STATE OF GEORGIA

STANDARD
REINFORCED CONCRETE APPROACH SLAB
9.14 m LENGTH
TYPICAL USE : WHERE SHOULDER IS ADJACENT TO ROADWAY AND/OR BRIDGE
(METRIC)   OCT. 1996

DES. ____ DRW. ____ TRA. ____
(SUBMITTED) [signature] STATE ROAD & AIRPORT DESIGN ENGR.
(APPROVED) [signature]

NUMBER
9017P