STATE	PROJECT NUMBER	SHEET NO.	TOTAL SHEETS
GA	NHS-M002-00(052)	11	15

① PLATES
② PLATES
③ PLATES
④ STRAPS AT 6" O.C.
⑤ PLATE AT EA. FINGER - SEE DETAIL
⑥ 18 OZ. HYPALON-COATED NYLON OR EQUAL
⑦ L 3x2x1/2 WITH 1/2"ø ERECTION BOLT AND WASHER.
⑧ RECESS

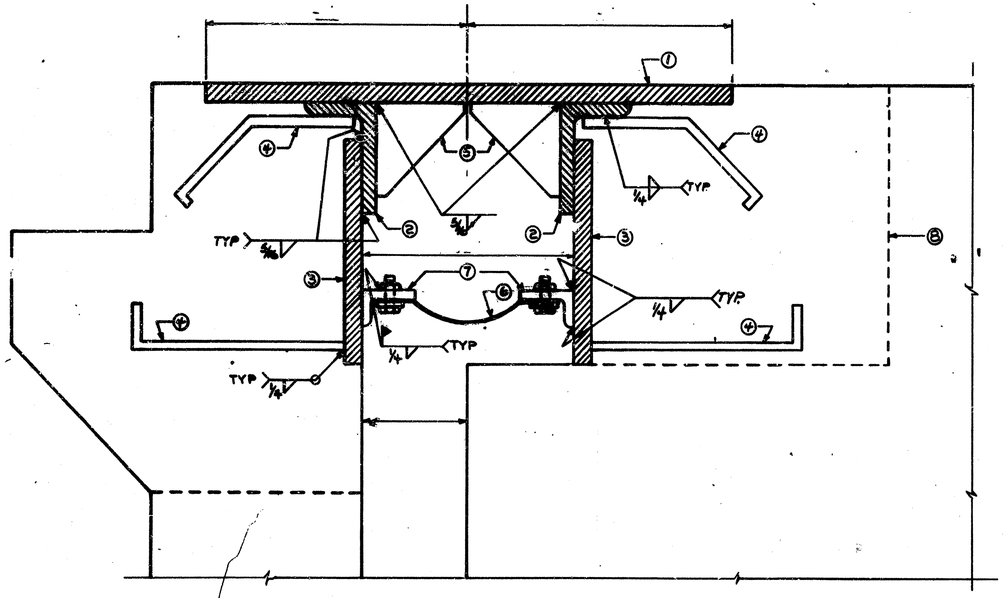

SECTION- ARMORED JOINT AT END BENT
TROUGH DETAIL

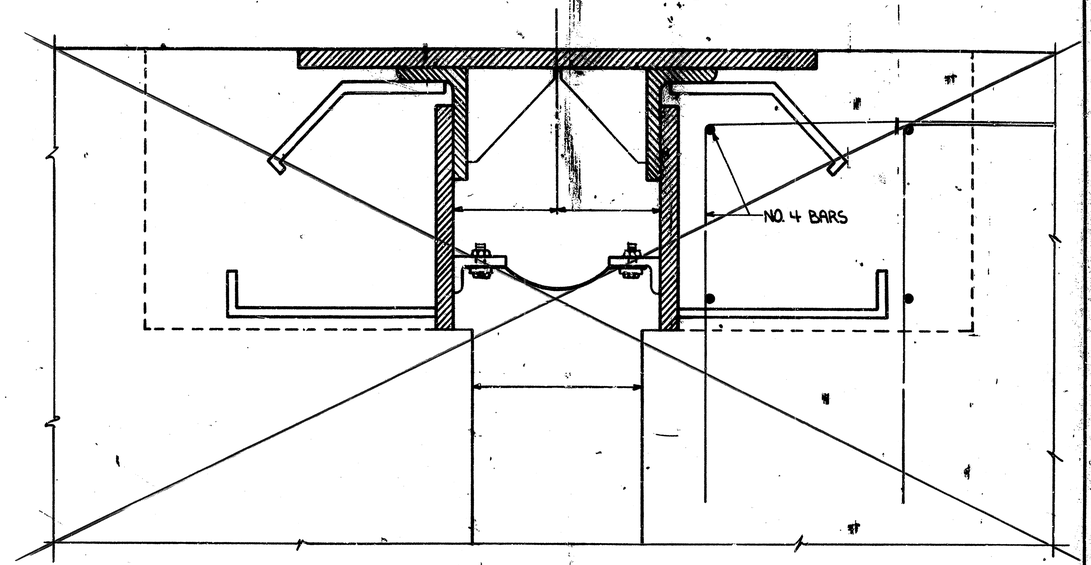

SECTION- ARMORED JOINT AT INTERMEDIATE BENT
TROUGH DETAIL

FOR ADDITIONAL DETAILS SEE SHEET 26 OF 45.

TROUGH SHALL BE SLOPED TO DRAIN.

DETAILS THIS SHEET FOR TROUGH AND TROUGH ATTACHMENTS SUPERSEDE DETAILS SHOWING TROUGH ATTACHED BY HOOKS.

REPLACE EXISTING ARMORED JOINT TROUGH AS SHOWN - BENT 1 ONLY.

BRIDGE 15

GEORGIA
DEPARTMENT OF TRANSPORTATION
HIGHWAY DIVISION - BRIDGE DESIGN

I-20 EBL OVER I-75/85, CENTRAL AVE. & PRYOR ST.

ARMORED JOINT TROUGH DETAILS - SHEET 2

FULTON COUNTY — I-75-2(88)C

NO SCALE — JULY 1985

REVISIONS	BY	DATE
ADDED 7 BRANS	HWC	3-11-85
REVISED SUST DETAIL	HWC	6-18-85

BRIDGE SHEET 8 OF 9

DESIGNED H.W.C. DRAWN H.S.M. TRACED CHECKED L.A.M. REVIEWED H.W.C. APPROVED

22"
17"
11"
8.5"
8.5"
11"
17"
22