STATE	PROJECT NUMBER	SHEET NO.	TOTAL SHEETS
GA.	NHS-M002-00(052)	10	15

⊗ NO.4 BARS SHALL EXTEND A MINIMUM OF ONE FOOT(12") INTO CONCRETE FROM BLOCKOUT.

⊗⊗ COST OF NO. 4 BARS SHALL BE INCLUDED IN COST OF ARMORED JOINT. NO.4 BARS SHALL BE DETAILED ON ARMORED JOINT SHOP DRAWING

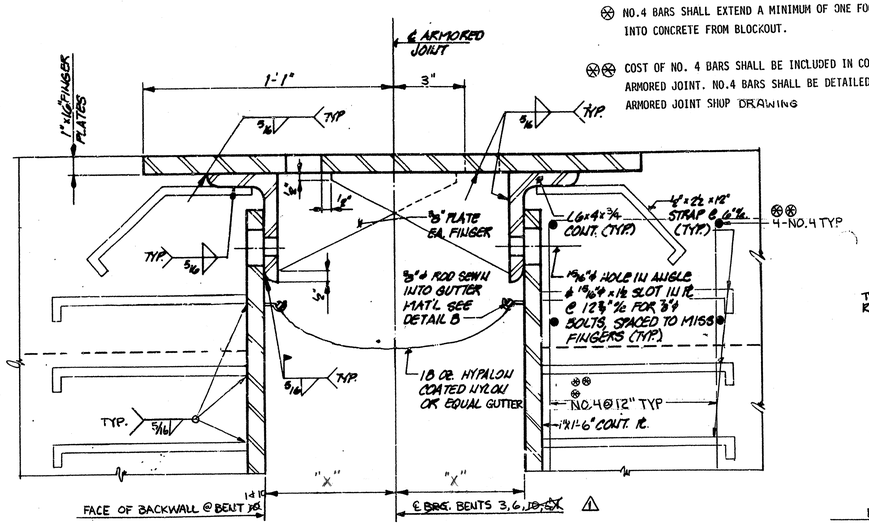

SECTION - ARMORED JOINT

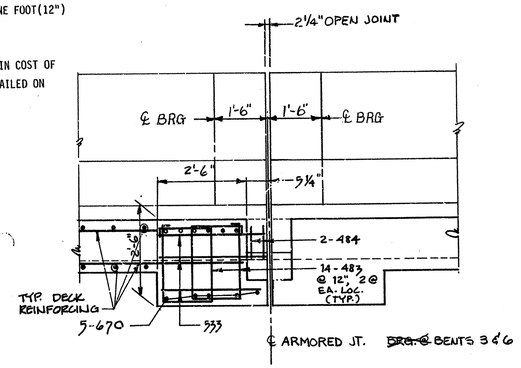

1/86 SECTION AT INTERM. BENT △

(ARMORED JT. LS. & PLS. NOT SHOWN)

26

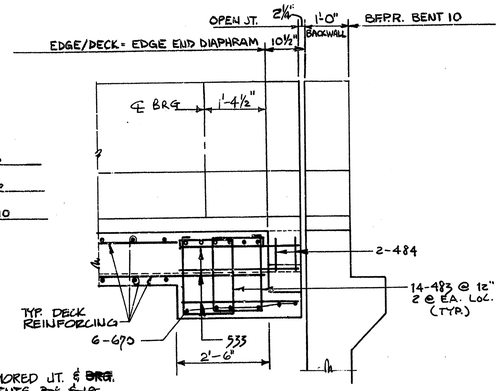

2/26 SECTION AT END BENT △

(ARMORED JT. LS. & PLS. NOT SHOWN)

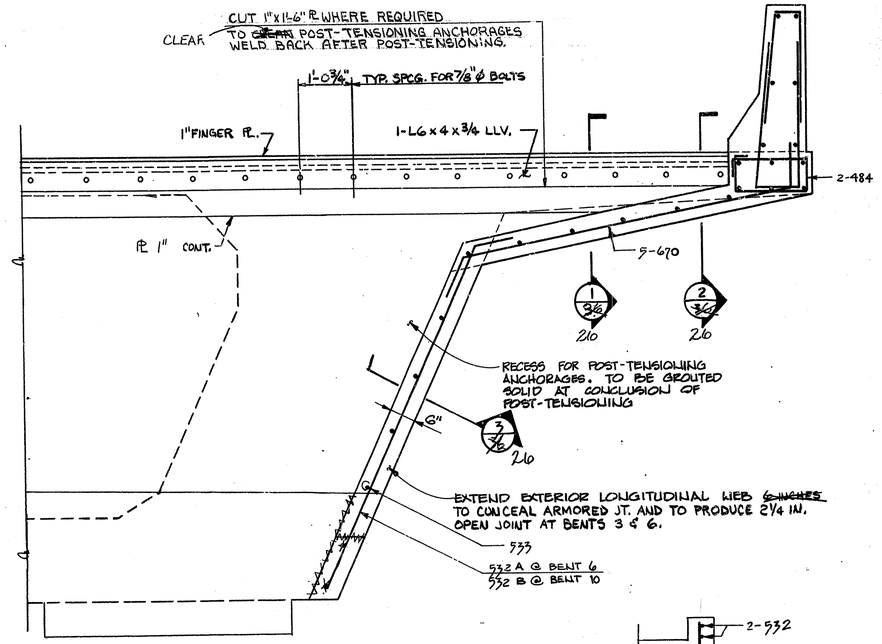

ELEVATION - ARMORED JOINT △

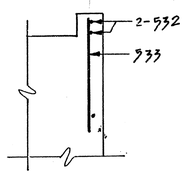

3/26 SECTION

26

REPLACE BACKWALL SIDE OF EXISTING ARMORED JOINT WITH NEW CONSTRUCTION - BENT 1 ONLY.
COST OF 18 oz HYPALON COATED NYLON GUTTER TO BE INCLUDED IN PRICE BID FOR STRUCTURAL STEEL.

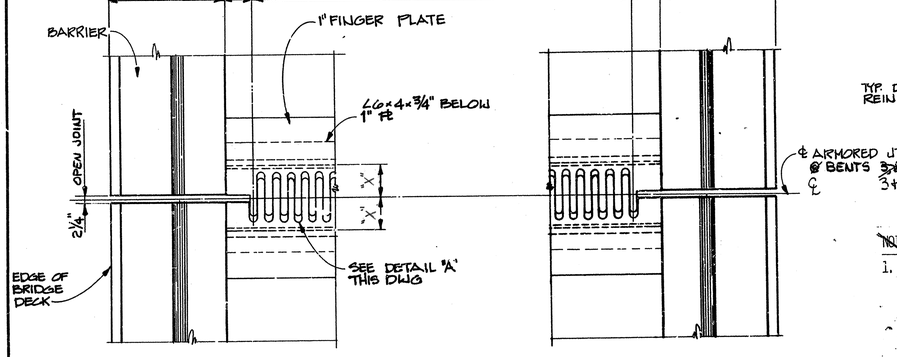

* HORIZONTAL DIMENSION DOES NOT INCLUDE SUPERELEVATION

PLAN - ARMORED JOINT

NOTE FOR DECK SEAL ASSEMBLY AT BENT NO. 9

1. DECK SEAL TO BE ELASTOMERIC MEMBRANE WITH RECESSED ARMORED JOINT L. ASSEMBLY AS DETAILED AND SPECIFIED ON GEORGIA D.O.T. STANDARD FOR BRIDGE DECK JOINT SEALS, REVISED TO 8/2/83.

INSTALLATION PROCEDURE

COMPLETE SHOP DRAWINGS, INCLUDING A DETAILED DESCRIPTION OF THE INSTALLATION PROCEDURE MUST BE SUBMITTED TO THE ENGINEER FOR APPROVAL PRIOR TO THE START OF WORK ON THE BRIDGE SUPERSTRUCTURE.

1. BLOCKOUT FOR EXPANSION JOINT AND POUR BOX.
2. FABRICATE THE JOINT AND TEMPORARILY LOCK THE TWO HALVES AS A UNIT.
3. GRIND BRIDGE DECK TO SATISFACTORY LEVEL.
4. INSTALL JOINT AND BACKFILL RECESS. RELEASE TEMPORARY LOCK.

TEMP.-F°	"X"
20	6¾"
30	6⅝"
40	6½"
50	6⅜"
60	6¼"
70	6⅛"
80	6"
90	5⅞"
100	5¾"

TABLE OF "X" DIM.

NOTES:

1. ~~ALL DIMENSIONS ARE AT 60° AND AT CONCLUSION OF POST-TENSIONING~~
2. ~~COST OF ARMORED JOINTS SHALL BE INCLUDED IN PRICE BID FOR JUMP SUPERSTRUCTURE CONCRETE.~~
3. ALL ARMORED JOINT STRUCTURAL STEEL SHALL BE A709 GRADE 50W. STRAPS SHALL BE A709 GRADE 36, 50, OR 50W.
4. BOLTS FOR ARMORED JOINT LS. TO BE ASTM. A36 MATERIAL.
5. ~~WELDING ELECTRODES FOR ASTM. A588 MATERIAL TO BE AWS A5.5 E7018.~~
6. CONTRACTOR SHALL SUBMIT ARMORED JOINT ASSEMBLY SHOP DETAIL DWGS. FOR APPROVAL BY ENGINEER. DETAILS TO BE APPROVED BY ENGINEER PRIOR TO COMMENCEMENT OF FABRICATION.

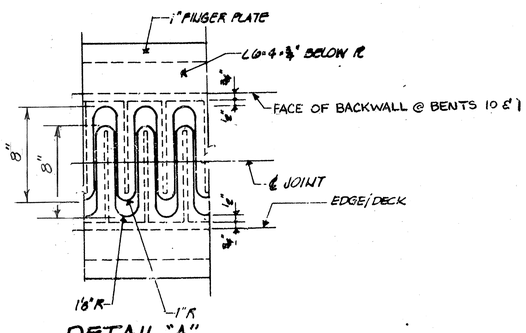

DETAIL "A"

NO SCALE

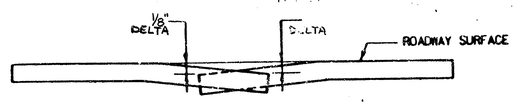

NOTE SPRING FLANGE SO THAT FINGERS SHALL BE IN POSITION SHOWN AFTER TOTAL DEAD LOAD DEFLECTION HAS OCCURED.

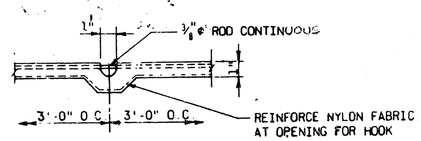

DETAIL "B"

NO SCALE

BRIDGE NO. 15

BROWDER + LEGUIZAMON & ASSOC., INC. ENGINEERS — ATLANTA GEORGIA

EWELL W. FINLEY & PARTNERS, INC. CONSULTING ENGINEERS — ATLANTA GEORGIA

GEORGIA DEPARTMENT OF TRANSPORTATION
HIGHWAY DIVISION-BRIDGE DESIGN

1-20 EBL OVER I-75/85, CENTRAL AVE. AND PRYOR STREET

ARMORED JOINT DETAILS

FULTON CO. GEORGIA

JULY, 1984

REVISIONS	BY	DATE
△ Revised Detail RESUBMITTED	DMT	1-11-85

BRIDGE SHEET 7 OF 9

DESIGNED ____ DRAWN ____ TRACED ____ CHECKED ____ REVIEWED ____ APPROVED ____