STATE	PROJECT NUMBER	SHEET NO.	TOTAL SHEETS
GA.		46	59

NOTE: PLACE YEAR BRIDGE IS BUILT ON EACH RIGHT-HAND END POST AS SEEN BY APPROACHING TRAFFIC. FORM NUMERALS WITH APPROVED METAL DIES. NUMERAL GROUP, ETC., TO BE ON GRADE.

NOTE: USE EXTREME CARE IN PLACING FORMED HOLES TO CONFORM TO PATTERN EXACTLY.

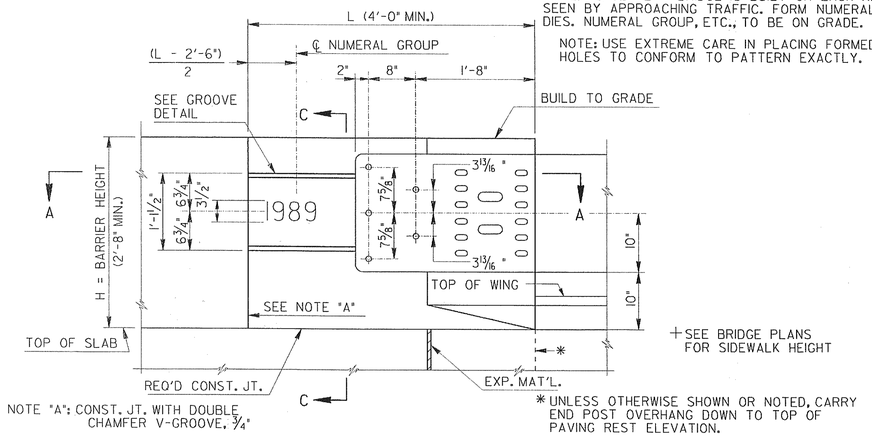

FRONT ELEVATION - END POST

BARRIER
SCALE: 1"=1'-0"

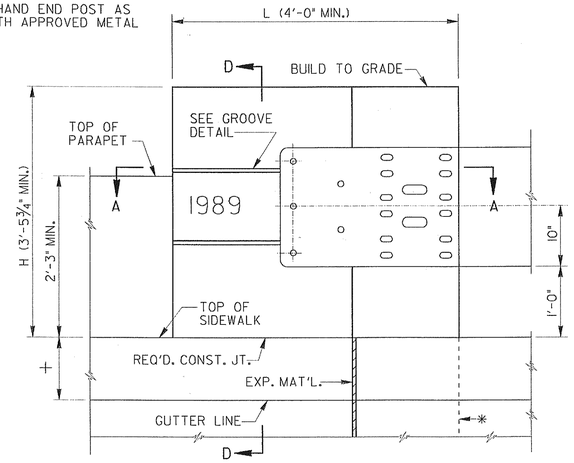

FRONT ELEVATION - END POST

SIDEWALK AND PARAPET
SCALE: 1" = 1'-0"

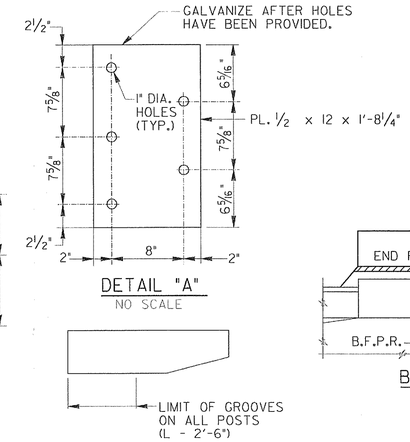

DETAIL "A"

NO SCALE

DETAIL "B"

NO SCALE

MATERIALS	
ITEM	SPECIFICATIONS
GUARDRAIL	A.A.S.T.H.O. SPECIFICATION M 180
1/2" PLATE	A.S.T.M. DESIGNATIONS A-36
NUTS & BOLTS	A.S.T.M. DESIGNATION A-307
WASHERS	MEDIUM STEEL
GALVANIZING	A.S.T.M. A-153

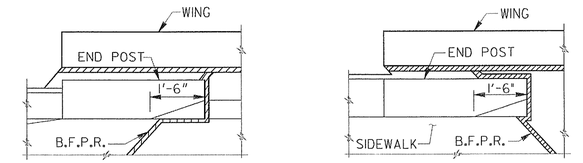

BARRIER

SIDEWALK AND PARAPET

TYPICAL SKEWED END DETAIL

SCALE: 1/2" = 1'-0"

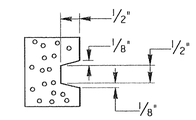

SEE DETAIL "B" FOR LIMITS OF GROOVE

GROOVE DETAIL

HALF SCALE

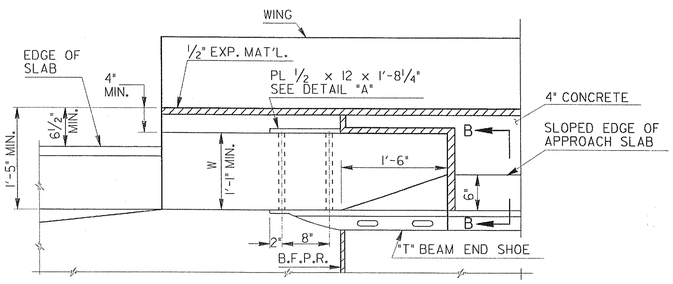

PLAN - END POST

BARRIER
SCALE: 1"=1'-0"

⊛ BOLT LENGTH SHALL BE OF SUFFICIENT LENGTH TO PROVIDE FOR FULL NUT ATTACHMENT. W + 3" DIMENSION SHALL BE FIELD VERIFIED PRIOR TO ORDERING BOLTS TO INSURE PROPER LENGTH.

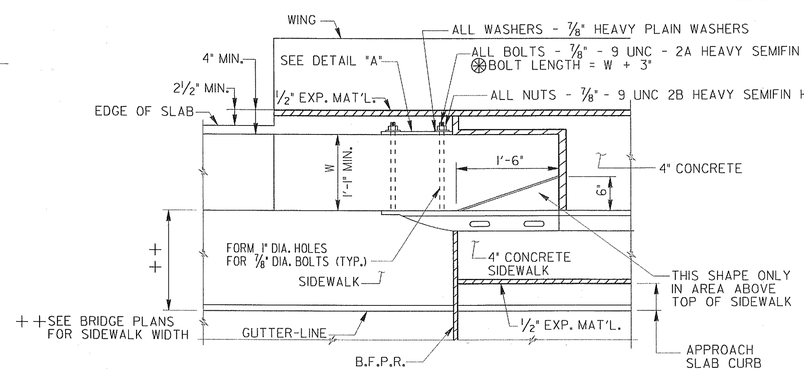

PLAN - END POST

SIDEWALK AND PARAPET
SCALE: 1" = 1'-0"

GENERAL NOTES

SPECIFICATIONS - GEORGIA STANDARD.

LOCATION - ALL END POSTS UNLESS NOTED ON BRIDGE PLANS.

CHAMFER - CHAMFER ALL EXPOSED EDGES 3/4".

GALVANIZING - ALL METAL PARTS SHALL BE GALVANIZED AFTER FABRICATION.

PAYMENT FOR MISCELLANEOUS HARDWARE - COST OF 1/2" PLATE AND MISCELLANEOUS HARDWARE SHALL BE INCLUDED IN THE PRICES BID FOR CONTRACT ITEMS.

PAYMENT FOR THE END POST - IF END POST IS A PORTION OF THE SUBSTRUCTURE, CONCRETE AND REINFORCEMENT ARE COMPUTED AND INCLUDED IN THE END BENT QUANTITIES.
IF END POST IS A PORTION OF THE SUPERSTRUCTURE, CONCRETE AND REINFORCEMENT ARE COMPUTED AND INCLUDED IN THE END SPAN QUANTITIES.

RESPONSIBILITY - WHEN THE BRIDGE CONTRACT IS SEPARATE FROM THE CONTRACT CONTAINING THE APPROACHING GUARDRAIL, THE BRIDGE CONTRACTOR SHALL ONLY BE RESPONSIBLE FOR THE CONSTRUCTION OF THE END POSTS AND FORMING OF THE 1" DIAMETER BOLT HOLES. THE CONTRACT CONTAINING THE APPROACHING GUARDRAIL SHALL BE RESPONSIBLE FOR FURNISHING AND INSTALLING THE SPECIAL END SHOE, PLATE, NUTS, WASHERS, AND BOLTS.

DIMENSIONS - FOR DIMENSIONS "L", "H", AND "W" AND OTHER DIMENSIONS, SEE BRIDGE PLANS.

END POST - END POST TO BE CONSTRUCTED AFTER HANDRAIL IS IN PLACE.
END POST TO BE CONSTRUCTED AFTER BARRIER IS CONSTRUCTED WHEN NO HANDRAIL IS USED.

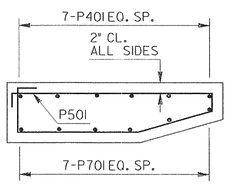

SECTION A-A

SCALE: 3/4" = 1'-0"

NOTE: IF END POST IS ON SUBSTRUCTURE, SEE BRIDGE PLANS FOR BARS THAT DOWEL FROM BELOW.

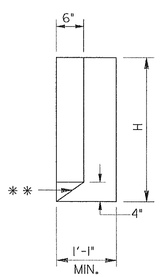

** SLOPED PORTION OF END POST TO BE POURED MONOLITHIC WITH END POST

SECTION B-B

SCALE: 3/4" = 1'-0"

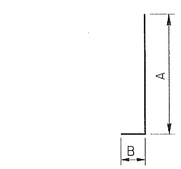

P701

P401

NO. BARS REQ'D		
MARK	BARRIER	SIDEWALK
P401	7	7
P501	6	6
P701	7	7

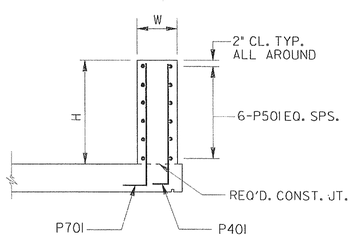

SECTION C-C

SCALE: 1/2" = 1'-0"

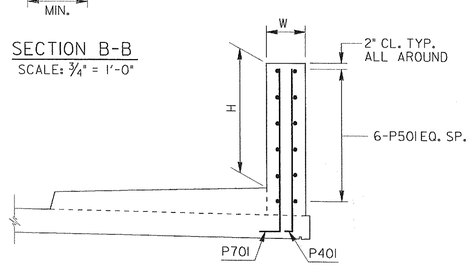

SECTION D-D

SCALE: 1/2" = 1'-0"

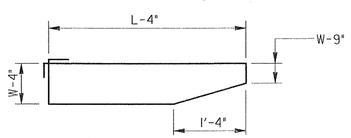

P501

FOR END POST ON SUPERSTRUCTURE:
A = H - 4" + SLAB DEPTH (FOR BARRIER)
A = H - 4" + SIDEWALK DEPTH + SLAB DEPTH (FOR SIDEWALK AND PARAPET)
B = 1'-0"

FOR END POST ON SUBSTRUCTURE:
A = H - 2"
B = 0"

NOTE: ROTATE P701 AND P401 AS NECESSARY TO MAINTAIN 2" MIN. CL. IN CONCRETE.

REVISION	DATE	BY
REV. TRANSITION	9-30-02	

DEPARTMENT OF TRANSPORTATION
STATE OF GEORGIA

STANDARD

END POST AND
END POST GUARDRAIL ATTACHMENT DETAILS

SCALE: AS SHOWN — MAY 1989

DESIGNED H.W.C.
DRAWN E.R.M.
CHECKED H.W.C.

(SUBMITTED)
STATE ROAD & AIRPORT DESIGN ENGINEER
(APPROVED)
CHIEF ENGINEER

NUMBER 3054