STATE	PROJECT NUMBER	SHEET NO.	TOTAL SHEETS
GA.	NHS-M001-00(996)	28	59

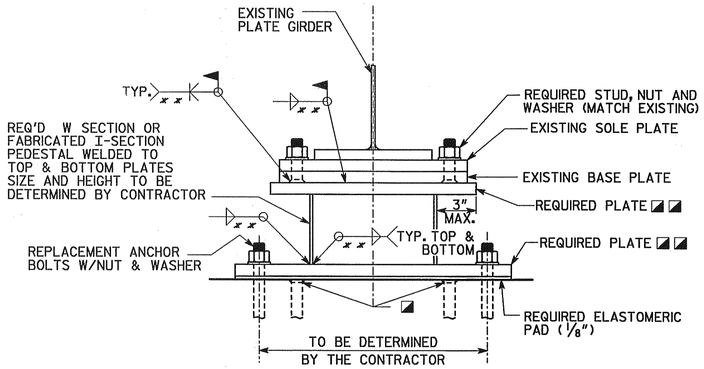

PEDESTAL/BEARING ASSEMBLY SCHEMATIC

(BENT 3)

◪ CHIP CONCRETE AROUND EXISTING ANCHOR BOLTS TO 3/16" BELOW TOP OF CAP, CUT ANCHOR BOLTS AND FILL HOLE WITH EPOXY BONDING COMPOUND

✱✱ SIZE TO BE DETERMINED BY THE CONTRACTOR

◪◪ SEE NOTES

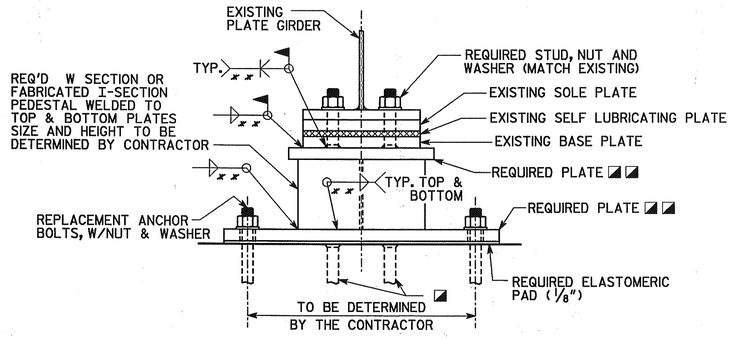

PEDESTAL/BEARING ASSEMBLY SCHEMATIC

(ABUTMENTS 1 AND 5)

◪ CHIP CONCRETE AROUND EXISTING ANCHOR BOLTS TO 3/16" BELOW TOP OF CAP, CUT ANCHOR BOLTS AND FILL HOLE WITH EPOXY BONDING COMPOUND

✱✱ SIZE TO BE DETERMINED BY THE CONTRACTOR

◪◪ SEE NOTES

NOTES

WELDS-ALL WELDS SHOWN SHALL BE PROPERLY SIZED TO RESIST ANY LOADS APPLIED THROUGH THE BEARINGS AS PER THE AASHTO SPECIFICATIONS.

EXISTING BEARING COMPONENTS-THE CONTRACTOR AND FIELD ENGINEER SHALL INSPECT ALL EXISTING BEARINGS TO IDENTIFY ANY DEFECTIVE BEARING COMPONENTS. IF ANY DEFECTIVE BEARING COMPONENTS ARE FOUND, THEY SHALL BE REPLACED. COMPENSATION FOR ANY REQUIRED BEARING COMPONENT REPLACEMENTS SHALL BE MADE BY MEANS OF A SUPPLEMENTAL AGREEMENT. EXISTING BEARINGS SHALL BE CLEANED AND PAINTED AS PER SECTION 535 OF THE GDOT STANDARD SPECIFICATIONS.

ANCHOR BOLTS-NEW ANCHOR BOLTS SHALL BE SWEDGED WITH SQUARE PLATE WASHERS AND HEX NUTS AND SHALL BE ASTM-A276 TYPE 304 STAINLESS STEEL, SIZE TO MATCH EXISTING BOLTS. SECURE ANCHOR BOLTS IN HOLES WITH AN APPROVED TYPE VIII EPOXY RESIN ADHESIVE.

DRILLED HOLES- REQUIRED HOLES FOR NEW ANCHOR BOLTS SHALL BE 3" DIA. BY 12" DEEP. USE AN IMPACT DRILL FOR DRILLING HOLES IN CONCRETE. DO NOT DAMAGE THE EXISTING CAP MAIN REINFORCING STEEL.

NEW STEEL-ALL NEW BEARING ASSEMBLY COMPONENTS SHALL BE A709 GRADE 36 STEEL UNLESS OTHERWISE NOTED AND SHALL BE CLEANED AND PAINTED IN ACCORDANCE WITH SECTION 535 OF THE GDOT STANDARD SPECIFICATIONS.

ELASTOMERIC PADS-PROVIDE ELASTOMERIC PADS BETWEEN TOP OF CAP AND BEARING ASSEMBLY IN LIEU OF RED PRIMER-SATURATED DUCK AS SPECIFIED IN SECTION 501.3.05 ELASTOMERIC PADS SHALL BE MADE OF 60 DUROMETER HARDNESS NEOPRENE WITH TWO 13/16" DIAMETER HOLES FOR ANCHOR BOLTS.

COST OF MATERIALS-COST OF CLEANING AND PAINTING BEARINGS, FURNISHING AND INSTALLING PLATES, PEDESTALS, ANCHOR BOLTS, ELASTOMERIC PADS AND ANY OTHER MATERIALS NECESSARY TO COMPLETE THE WORK SHALL BE INCLUDED IN THE PRICE BID FOR ITEM 518-RAISE EXISTING BRIDGE.

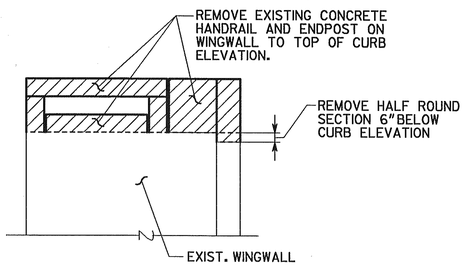

EXISTING WINGWALL

(EXTERIOR VIEW)

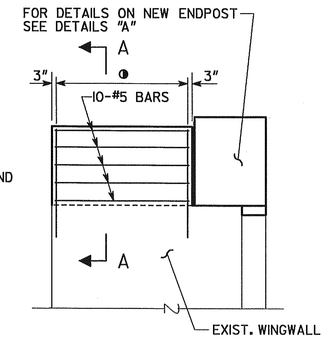

WINGWALL ADDITION

❶ #7 DOWEL BAR @ 12" MAX. S/W #5 ⊓ BAR

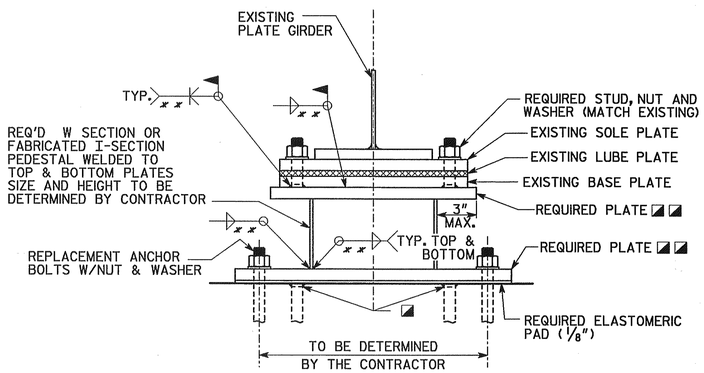

PEDESTAL/BEARING ASSEMBLY SCHEMATIC

(BENTS 2 AND 4)

◪ CHIP CONCRETE AROUND EXISTING ANCHOR BOLTS TO 3/16" BELOW TOP OF CAP, CUT ANCHOR BOLTS AND FILL HOLE WITH EPOXY BONDING COMPOUND

✱✱ SIZE TO BE DETERMINED BY THE CONTRACTOR

◪◪ SEE NOTES

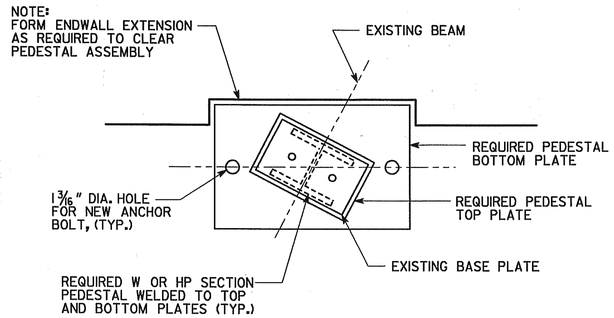

PLAN SCHEMATIC (END BENTS ONLY)

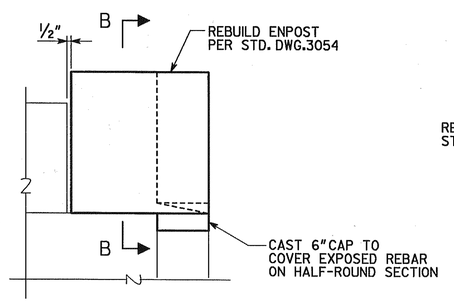

DETAIL "A"

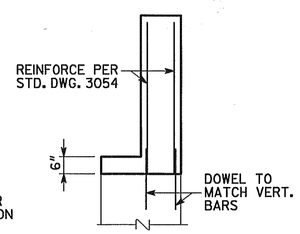

SECTION B-B

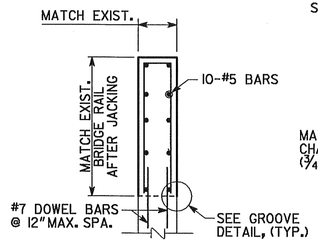

SECTION A-A

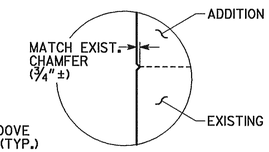

GROOVE DETAIL

NOTE: ALL CONCRETE SHALL BE 24HR. ACCELERATED STRENGTH CONCRETE AS PER SECTION 504 OF THE GEORGIA DOT STANDARD SPECIFICATIONS. COST OF REINFORCING TO BE INCLUDED IN THE PRICE BID FOR ITEM 504-0600-24 HR. ACCELERATED STRENGTH CONCRETE.

GEORGIA REGISTERED PROFESSIONAL ENGINEER PE-029180 5-05-04 ROGER D. BYBEE

BRIDGE NO. 4

GEORGIA
DEPARTMENT OF TRANSPORTATION
PRECONSTRUCTION DIVISION-OFFICE OF BRIDGE DESIGN

GS&P
GRESHAM SMITH AND PARTNERS

BRIDGE SHEET 3 OF 3

BY	REVISIONS	DATE

JACKING DETAILS

TRIMBLE HOLLOW ROAD OVER I-75

GORDON CO. NHS-M001-00(996)

SCALE: NONE JANUARY 2004

DESIGNED RDB | CHECKED RDB | REVIEWED X
DRAWN RCP | DESIGN GROUP X | APPROVED X

X.DGN