STATE	PROJECT NUMBER	SHEET NO.	TOTAL SHEETS
GA.		24	51

USES: A silt control gate is a structure placed on a pipe, small box culvert, or drop inlet to form a basin to catch silt and prevent it from leaving the construction site.

TYPE 1 - FOR BOX CULVERTS

NOTES:

1. CONCRETE APRONS SHOWN IN TOP VIEW SHALL BE CLASS "A", 6" THICKNESS WITH NO STEEL REINFORCEMENT. PAYMENT FOR THIS SHALL BE IN ACCORDANCE WITH SECTION 163.05.
2. REMOVAL OF THE TYPE 1 SILT CONTROL GATE SHALL BE IN ACCORDANCE WITH SECTION 163.03.

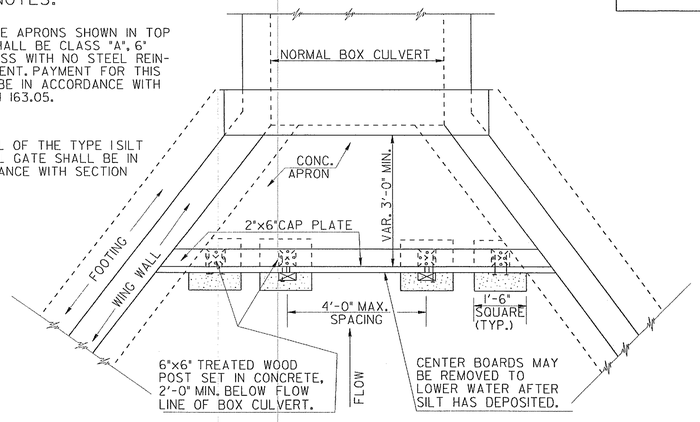

TOP VIEW

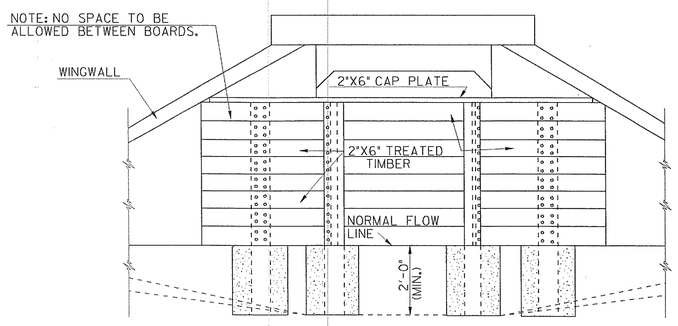

FRONT VIEW

TYPE 2 - FOR STRAIGHT HEADWALLS

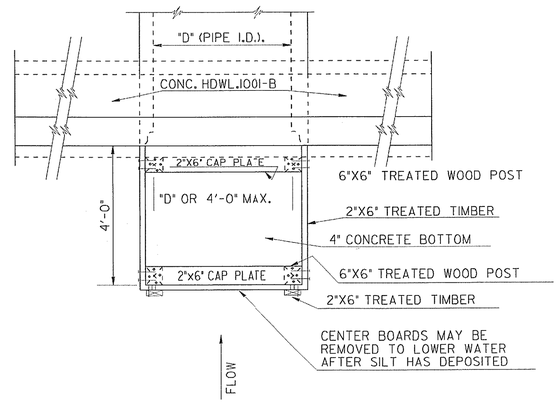

TOP VIEW

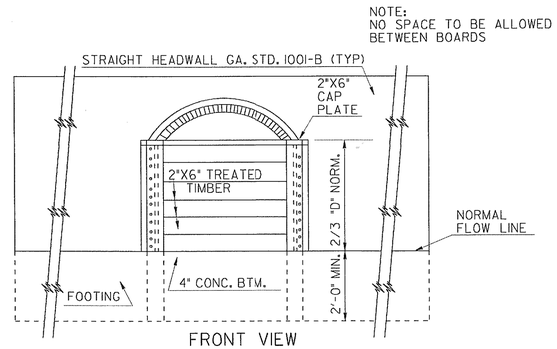

FRONT VIEW

TYPE 3 - FOR FLARED END SECTIONS AND TAPERED HEADWALLS

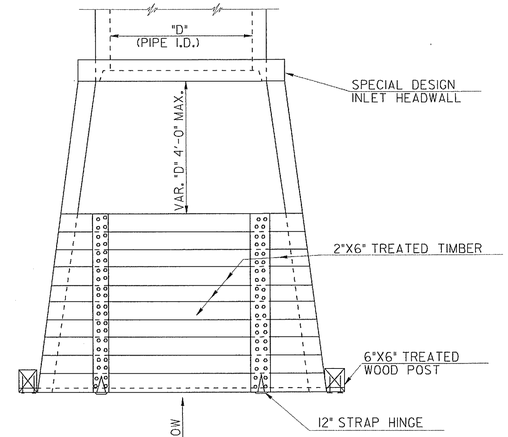

TOP VIEW

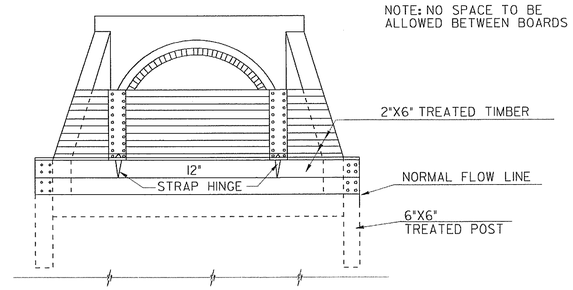

FRONT VIEW

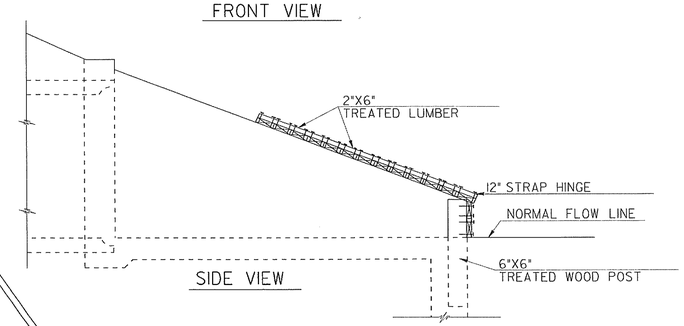

SIDE VIEW

NOTE:
THE DRAINAGE AREA ENTERING THE INLET SEDIMENT TRAP SHALL BE NO GREATER THAN ONE ACRE.

TYPICAL CONSTRUCTION SEQUENCE FOR INLET SEDIMENT TRAP ALTERNATE

1. EXCAVATE APPROXIMATELY 4" TO 6" BELOW THE TOP OF THE INLET STRUCTURE.
2. PLACE THE FRAME ONTO THE INLET STRUCTURE, ENSURING PROPER SEATING OF FRAME TO STRUCTURE.
3. SLIDE THE FILTER OVER THE FRAME.
4. FILL THE FILTER POCKETS WITH SOIL, #57 GRAVEL OR EQUIVALENT. THE FILTER POCKETS SHOULD BE COMPLETELY FILLED TO ENSURE A GOOD SEAL BETWEEN THE GROUND AND INLET STRUCTURE.
5. BACK FILL AROUND THE FRAME AND FILTER ASSEMBLY IS NOT REQUIRED TO COMPLETE INSTALLATION; HOWEVER, BACK FILLING MAY BE NECESSARY TO COMPLETE EXCAVATION REQUIREMENTS FOR THE SITE.

NOTE:
INLET SEDIMENT TRAP ALTERNATE SHALL BE AS APPROVED BY THE GA. D.O.T. OFFICE OF MATERIALS & RESEARCH. DETAILS & SPECIFICATIONS NOT SHOWN ARE PER THE MANUFACTURER'S REQUIREMENTS.

NOTE:
IF RUNOFF MAY BYPASS THE PROTECTED INLET, A TEMPORARY DIKE SHOULD BE CONSTRUCTED ON THE DOWN SLOPE SIDE OF THE STRUCTURE.

INLET SEDIMENT TRAP - FOR DROP INLETS

(PLASTIC ALTERNATE)

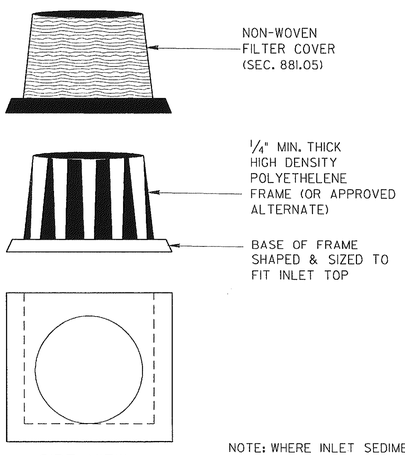

SIDE VIEW

NOTE: WHERE INLET SEDIMENT TRAPS ARE SPECIFIED, EITHER THE PLASTIC ALTERNATE (LEFT) OR THE METAL ALTERNATE (RIGHT) MAY BE USED AS APPROVED BY THE ENGINEER.

(METAL ALTERNATE)

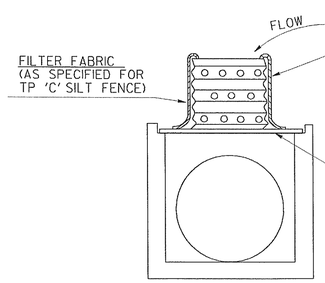

SIDE VIEW

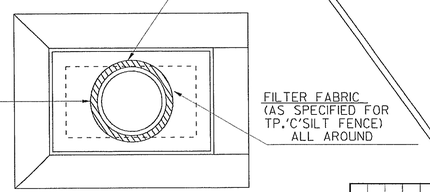

TOP VIEW

NOTE: SEE SEPARATE DETAILS FOR SILT FENCE AROUND DROP INLETS.

NOTE:
INLET SEDIMENT TRAP AND INLET TO BE BUILT CONTINUOUS WITH PIPE

NOTE:
PAYMENT AS INLET SEDIMENT TRAP PER EACH

MGR	BY	REVISION	DATE
		ADDED PAYMENT NOTE	10-22-02

DEPARTMENT OF TRANSPORTATION
STATE OF GEORGIA

CONSTRUCTION DETAILS
SILT CONTROL GATES FOR STRUCTURES TYPE- 1, 2, 3:
INLET SEDIMENT TRAP

REV. & REDR. DEC., 2000

Designed
Drawn
Traced
Checked 8-72

D-20