STATE	PROJECT NUMBER	SHEET NO.	TOTAL SHEETS
GA.	NHS-M001-00(995)	6	51

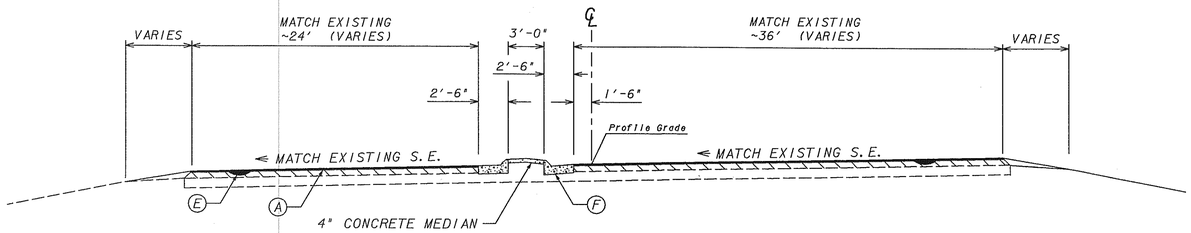

TYPICAL SECTION
SITE #3- WADE GREEN ROAD
SUPER ELEVATION SECTION
APPLIES TO END OF BRIDGE STA. 26+99.37 TO STA. 28+50.00

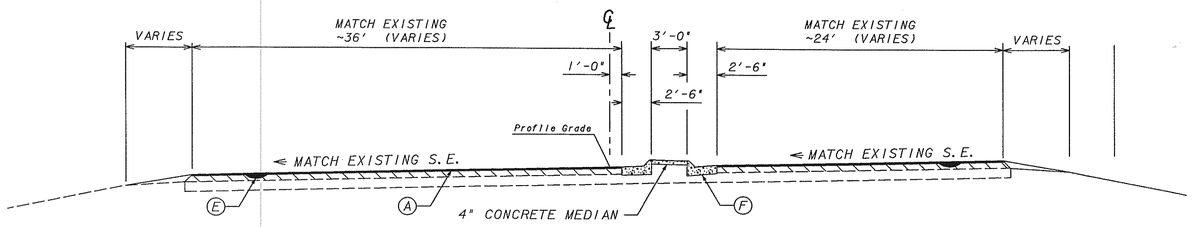

TYPICAL SECTION
SITE #3- WADE GREEN ROAD
SUPER ELEVATION SECTION
APPLIES TO STA. 21+00.00 TO BEGIN OF BRIDGE STA. 22+96.12

REQUIRED PAVEMENT

(A) RECYCLED ASPHALTIC CONCRETE 12.5 mm, SUPERPAVE, GP 1 OR 2, INCL. BITUM MAT'L & H. LIME (165 LB/SQ. YD.) MIX DESIGN LEVEL B
(B) RECYCLED ASPHALTIC CONCRETE 19 mm, SUPERPAVE, GP 1 OR 2, INCL. BITUM MAT'L & H. LIME (220 LB/SQ. YD.) MIX DESIGN LEVEL B
(C) RECYCLED ASPHALTIC CONCRETE 25 mm, SUPERPAVE, GP 1 OR 2, INCL. BITUM MAT'L & H. LIME (440 LB/SQ. YD.) MIX DESIGN LEVEL A
(D) GRADED AGGREGATE BASE, 10 INCH
(E) RECYCLED ASPHALTIC CONCRETE LEVELING, INCL. BITUM MAT'L & H LIME
(F) CONCRETE CURB & GUTTER 8 IN X 30 IN, GA STA. 9032B, TYPE 7

ALLOWABLE RANGES TABLE

FOR THIS PROJECT, CROSS SLOPES THAT ARE ADJUSTED TO 'BEST FIT' EXISTING PAVEMENT SLOPES ARE SUBJECT TO THE FOLLOWING LIMITS:

A. NORMAL CROWN

SECTION WITH GRADES 0.5% OR GREATER	SECTION WITH GRADES LESS THAN 0.5%
0.0150 FT/FT - MINIMUM	0.0156 FT/FT - MINIMUM
0.0208 FT/FT - DESIRABLE	0.0208 FT/FT - DESIRABLE
0.0250 FT/FT - MAXIMUM	0.0300 FT/FT - MAXIMUM

B. SUPERELEVATION RATE

S.E. RATE SHOWN ON PLANS OR SE RATE EXISTING IN FIELD, WHICHEVER IS GREATER.

C. SUPERELEVATION TRANSITION LENGTH (LENGTH FROM FLAT POINT TO FULL SE)

	RATE OF CHANGE	CORRESPONDING DIFFERENCE IN GRADE BETWEEN PIVOT POINT AND EDGE OF PAVEMENT
MINIMUM	1:150	0.67%
DESIRABLE	1:200	0.50%
MAXIMUM	1:300	0.33%

LENGTH SHALL BE SET TO AVOID CREATING A FLAT GUTTER GRADE ON LOW SIDE AND TO AVOID FLAT CROSS SLOPES AT OR NEAR THE LOW POINT OF VERTICAL CURVES.

D. POSITIONING OF SUPERELEVATION TRANSITION LENGTH ON SIMPLE CURVES

50% OF TRANSITION INSIDE CURVE - MAXIMUM
33% OF TRANSITION INSIDE CURVE - DESIRABLE
20% OF TRANSITION INSIDE CURVE - MINIMUM

NOTE: CROWN WIPE-OUT SHALL BE AT THE SAME RATE AS THE SE TRANSITION.

E. SMOOTHING OF BREAKS IN EDGE PROFILE AT BEGIN AND END OF TRANSITION SHALL BE ACCOMPLISHED BY VERTICAL CURVE WITH A MINIMUM LENGTH (IN FEET) EQUAL TO THE SPEED DESIGN (IN MPH).

SLOPE SELECTION

SLOPE	CUT	FILL
6:1	0'-2'	0'-2'
4:1	2'-6'	2'-6'
2:1	10+*	10+*

*REQUIRES GUARDRAIL

SLOPE SELECTION DETAIL

△ SLOPE 3/4" / 1'-0" OR RATE OF S.E. WHICHEVER IS GREATER

□ SLOPE AS FOLLOWS:
S.E. RATE OF 0.03'/FT OR LESS USE 1/2" IN 1'-0"
S.E. RATE OF 0.04'/FT, USE 3/8" IN 1'-0"
S.E. RATE OF 0.05'/FT, USE 1/4" IN 1'-0"
S.E. RATE OF 0.06'/FT, USE 1/8" IN 1'-0"
S.E. RATE OF 0.08'/FT, USE +0.01'/FT

ALGEBRAIC DIFFERENCE IN PAVING AND SHOULDER SLOPES NOT TO EXCEED 0.07'/FT

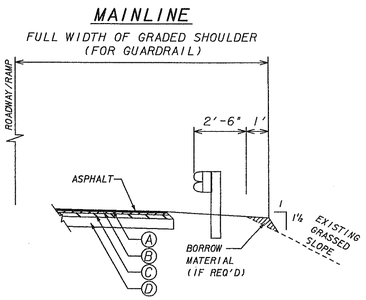

SLOPE CORRECTION BEHIND REPLACED GUARDRAIL

BORROW MATERIAL SHALL BE PLACED TO A DISTANCE TO MEET T-DIMENSION, THEN SLOPED AT A 1¼ SLOPE TO MEET SLOPE

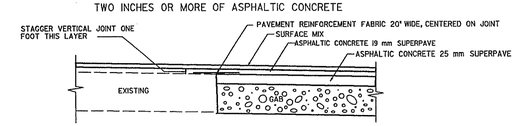

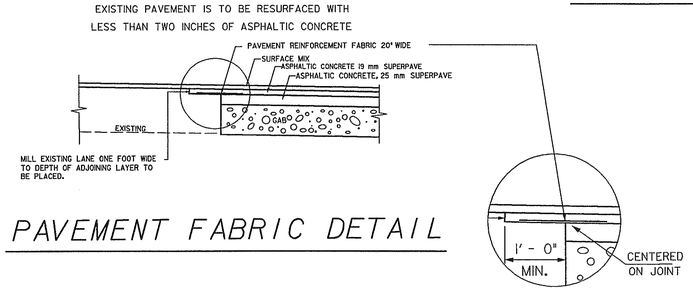

PAVEMENT FABRIC DETAIL

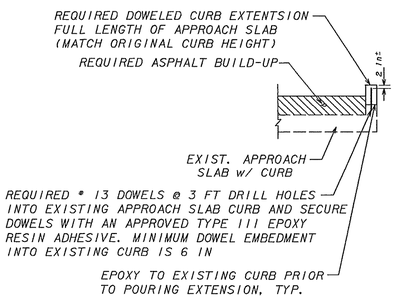

APPROACH SLAB CURB EXTENSION DETAIL

GRESHAM SMITH AND PARTNERS

SCALE IN FEET
0 6 12 24

DATE	REVISIONS	DATE	REVISIONS

GEORGIA
DEPARTMENT OF TRANSPORTATION
TYPICAL SECTIONS
PROJECT - NHS-M001-00(995)
COUNTY - COBB
DATE 2/5/04 SHEET 5-03

0:\2280926\t\001995C\001995cT01.dgn
12/18/2003