STATE	PROJECT NUMBER	SHEET NO.	TOTAL SHEETS
GA.	NHS-M001-00 (993)	77	110

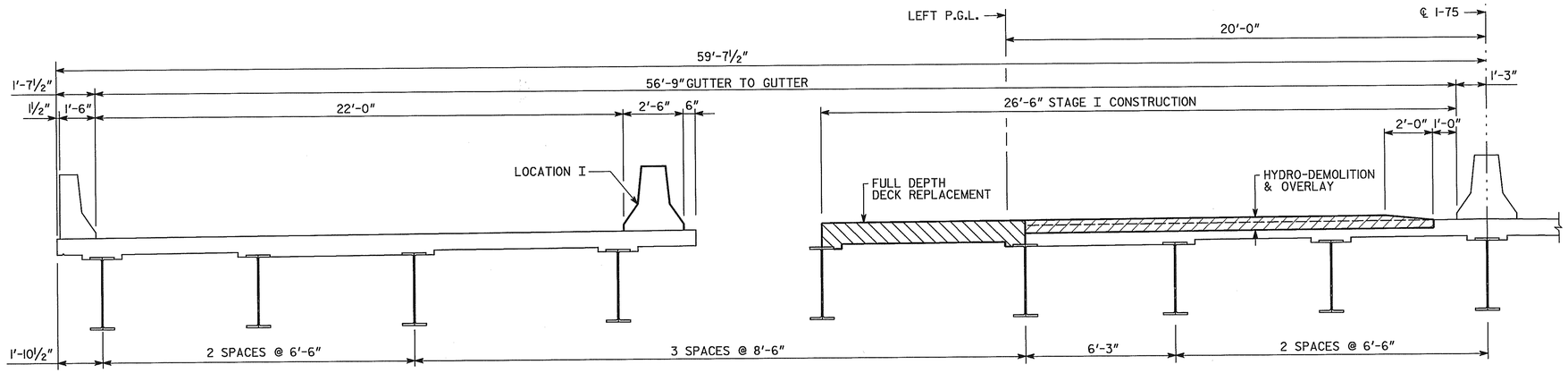

PARTIAL DECK SECTION

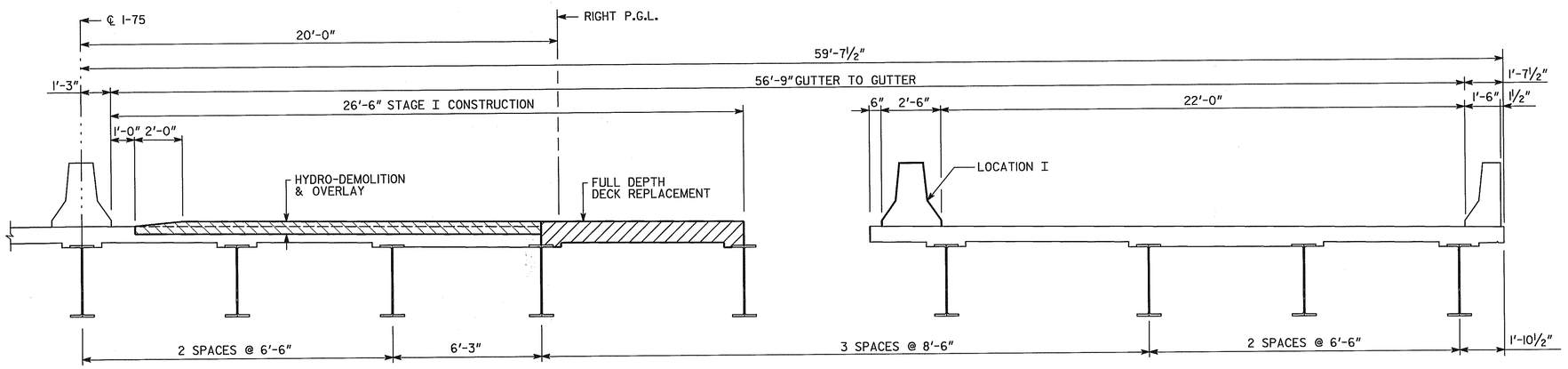

PARTIAL DECK SECTION

WORK CONSISTS OF

1. REMOVAL & REPLACEMENT OF THE ORIGINAL BRIDGE DECK WITH NEW DECK.
2. REMOVAL OF THE EXISTING CONCRETE DECK TO ½" BELOW THE BOTTOM OF THE TOP MAT OF REINFORCING STEEL AND REPLACEMENT WITH A NEW CONCRETE OVERLAY. ALL EXISTING REINFORCING STEEL EXPOSED DURING DECK REMOVAL SHALL REMAIN IN PLACE.
3. MODIFICATION OF EXISTING ENDWALLS AND REPLACEMENT OF APPROACH SLABS.

DESIGN DATA

SPECIFICATIONS ..... AASHTO 1996 WITH 1997 THROUGH 2002 INTERIMS (DESIGNED FOR SEISMIC PERFORMANCE CATEGORY A)

TYPICAL HS20-44 AND/OR MILITARY LOADING ..... IMPACT ALLOWED

CONCRETE: DECK SLAB..... 24 HOUR ACCELERATED STRENGTH f'_c = 3,500 PSI
DECK OVERLAY... 24 HOUR ACCELERATED STRENGTH f'_c = 3,500 PSI

REINFORCEMENT STEEL ..... GRADE 60, FY = 60,000 PSI

CONSTRUCTION SEQUENCE

STAGE I:

1. PLACE TEMPORARY BARRIER AT LOCATION I. MAINTAIN TWO 11'-0" LANES OF TRAFFIC ON THE LEFT BRIDGE AND TWO 11'-0" LANES OF TRAFFIC ON THE RIGHT BRIDGE.
2. REMOVE PORTIONS OF EXISTING DECK SLAB AS NECESSARY FOR STAGE I CONSTRUCTION.
3. CONSTRUCT STAGE I NEW DECK SLAB AND ENDWALL CHAMFERS.
4. PERFORM HYDRO-DEMOLITION AND OVERLAY OF THE REMAINING DECK.
5. RESEAL EXISTING DECK JOINTS.
6. PROCEED TO STAGE II.

BRIDGE NO. 6

JBT J.B. TRIMBLE, INC.
6445 Powers Ferry Rd.
Atlanta GA 30339
(770) 952-1022

GEORGIA
DEPARTMENT OF TRANSPORTATION
OPERATIONS DIVISION-OFFICE OF MAINTENANCE

DISTRICT 4 BRIDGE REPAIR (DECK REHABILITATION)
I-75 OVER S.R. 7 (U.S. 41)
CONSTRUCTION SEQUENCE - STAGE I
TIFT COUNTY NHS-M001-00 (993)

SCALE: AS SHOWN NOVEMBER 2003

DESIGNED PJC	CHECKED GLE	REVIEWED EHG
DRAWN ITD	DESIGN GROUP MAINTENANCE	APPROVED STH

REVISIONS | DATE | BY

BRIDGE SHEET 2 OF 5

C:\DGN\3I3029\993\BR6\993B6CSI.DGN 8-25-03 ITD

2/20/2008 9:57:48 AM \\GDOT-DSN1\GOPLOT\QCF\Road_Design_Tiff-18x12_to_Tiff-36x24.qcf wnguyen C:\Documents and Settings\wnguyen\Desktop\M001993\Construction\Plan Sheet\M001993_0077.tif GO-RD-Plans-Review