STATE	PROJECT NUMBER	SHEET NO.	TOTAL SHEETS
GA.	NHS-M001-00 (993)	75	110

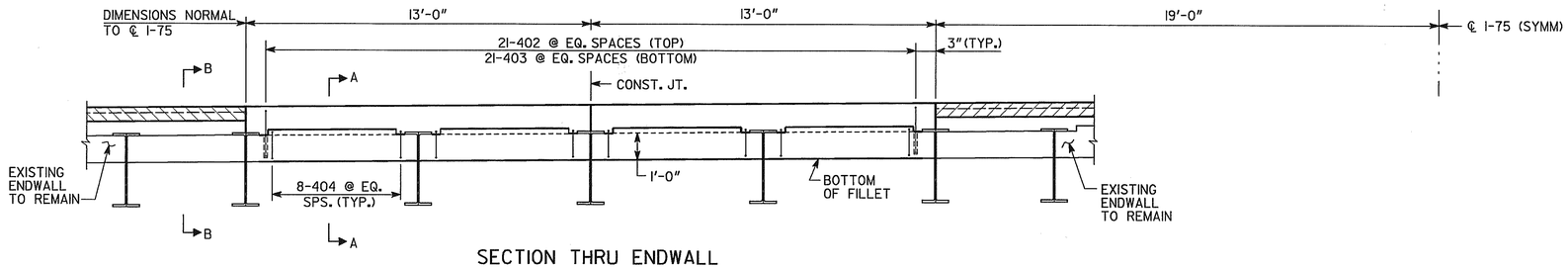

SECTION THRU ENDWALL

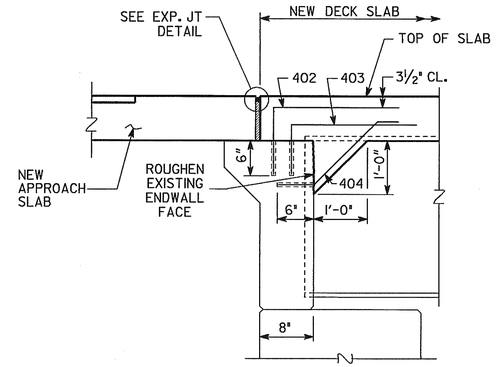

SLAB REINFORCEMENT NOT SHOWN.

SECTION A-A

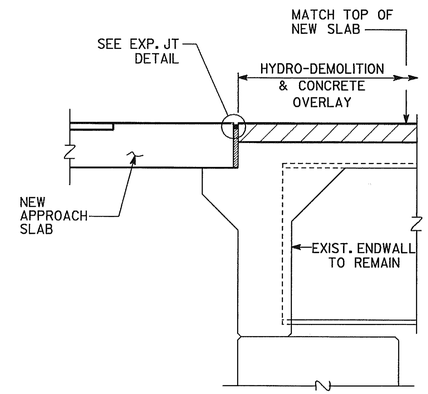

SLAB REINFORCEMENT NOT SHOWN.

SECTION B-B

REINFORCING SCHEDULE

LOCATION	NO. OF LOC.	MARK	LENGTH FT.	LENGTH IN.	NO. BARS REQ'D.	TYPE	AG	B FT.	B IN.	C FT.	C IN.	D FT.	D IN.	E FT.	E IN.
SPAN 1	1														
		400A	36-	6	124	1									
		402	2-	10	42	3		2-	0	0-	10				
		403	2-	8	42	3		2-	0	0-	8				
		404	2-	9	64	34	6	0-	6	1-	3	0-	6	1-	3
		500A	16-	1	110	1									
		500B	16-	0	110	1									
		501A	12-	11	110	1									
		501B	12-	10	110	1									
		600A	17-	8	80	1									
SPAN 2	1														
		400A	36-	6	124	1									
		500A	16-	1	110	1									
		500B	16-	0	110	1									
		501A	12-	11	110	1									
		501B	12-	10	110	1									
		600A	17-	8	80	1									
SPAN 3	1														
		400B	33-	6	124	1									
		400C	22-	8	124	1									
		500A	16-	1	186	1									
		500B	16-	0	186	1									
		501A	12-	11	186	1									
		501B	12-	10	186	1									
		600B	22-	8	80	1									

LOCATION	NO. OF LOC.	MARK	LENGTH FT.	LENGTH IN.	NO. BARS REQ'D.	TYPE	AG	B FT.	B IN.	C FT.	C IN.	D FT.	D IN.	E FT.	E IN.
SPAN 4	1														
		400D	27-	4	124	1									
		500A	16-	1	164	1									
		500B	16-	0	164	1									
		501A	12-	11	164	1									
		501B	12-	10	164	1									
SPAN 5	1														
		400E	18-	8	124	1									
		400F	25-	0	124	1									
		500A	16-	1	164	1									
		500B	16-	0	164	1									
		501A	12-	11	164	1									
		501B	12-	10	164	1									
		600C	18-	8	80	1									
SPAN 6	1														
		400G	59-	6	124	1									
		402	2-	10	42	3		2-	0	0-	10				
		403	2-	8	42	3		2-	0	0-	8				
		404	2-	9	64	34	6	0-	6	1-	3	0-	6	1-	3
		500A	16-	1	164	1									
		500B	16-	0	164	1									
		501A	12-	11	164	1									
		501B	12-	10	164	1									
		600D	24-	8	80	1									

NOTES

1. CLEARANCE OF REINFORCEMENT IS 2" UNLESS NOTED OTHERWISE.

BRIDGE NO. 5

J.B. TRIMBLE, INC.
6445 Powers Ferry Rd.
Atlanta GA 30339
(770) 952-1022

GEORGIA
DEPARTMENT OF TRANSPORTATION
OPERATIONS DIVISION-OFFICE OF MAINTENANCE

DISTRICT 4 BRIDGE REPAIR (DECK REHABILITATION)
I-75 OVER NORFOLK SOU. RWY. & MOORE HWY.
DECK SECTIONS - SHEET 2

TIFT COUNTY NHS-M001-00 (993)

SCALE: AS SHOWN NOVEMBER 2003

BY	REVISIONS	DATE

BRIDGE SHEET 6 OF 6

DESIGNED PJC DRAWN ITD CHECKED GLE DESIGN GROUP MAINTENANCE REVIEWED EHG APPROVED STH

C:\DGN\313029\993\BR5\993B5DS2.DGN 10-20-03 ITD

2/20/2008 9:57:54 AM \\GDOT-DSN1\GOPLOT\QCF\Road_Design_Tiff-18x12_to_Tiff-36x24.qcf wnguyen C:\Documents and Settings\wnguyen\Desktop\M001993\Construction\Plan Sheet\M001993_0075.tif GO-RD-Plans-Review