| STATE | PROJECT NUMBER | SHEET NO. | TOTAL SHEETS |
|---|---|---|---|
| GA. | NHS-M001-00 (993) | 72 | 110 |

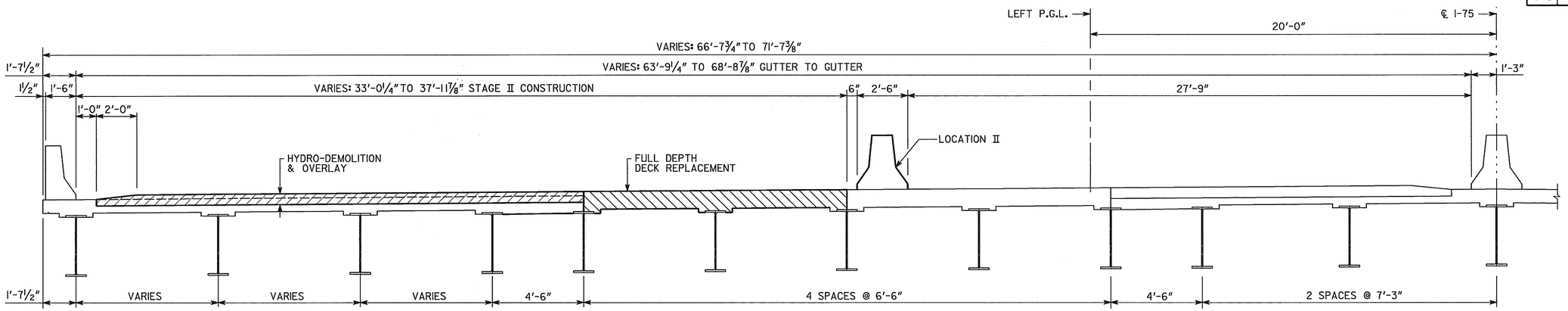


PARTIAL DECK SECTION

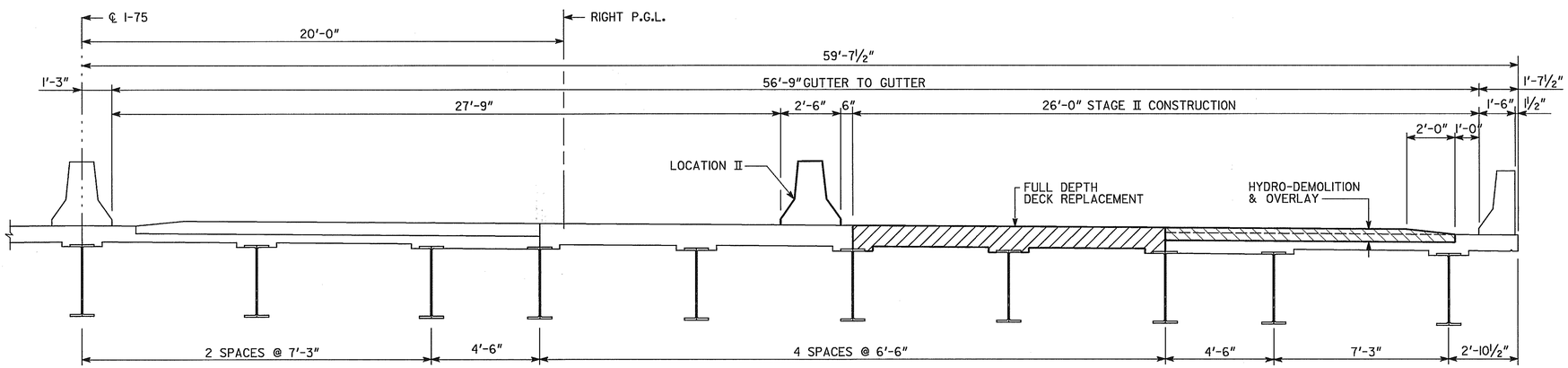


PARTIAL DECK SECTION

## CONSTRUCTION SEQUENCE

STAGE II:

1. PLACE TEMPORARY BARRIER AT LOCATION II. MAINTAIN TWO 11'-0" LANES OF TRAFFIC ON THE LEFT BRIDGE AND TWO 11'-0" LANES OF TRAFFIC ON THE RIGHT BRIDGE.
2. REMOVE PORTIONS OF EXISTING DECK SLAB AS NECESSARY FOR STAGE II CONSTRUCTION.
3. CONSTRUCT STAGE II NEW DECK SLAB AND ENDWALL CHAMFERS.
4. PERFORM HYDRO-DEMOLITION AND OVERLAY OF THE REMAINING DECK.
5. RESEAL EXISTING DECK JOINTS.

NOTE: THE ABOVE SEQUENCE SHALL BE COORDINATED WITH ROADWAY OPERATIONS. ***SEE ROADWAY PLANS*** IN LIEW OF THE ABOVE CONSTRUCTION SEQUENCE, THE CONTRACTOR MAY SUBMIT, FOR APPROVAL BY THE ENGINEER, HIS OWN CONSTRUCTION SEQUENCE.

BRIDGE NO. 5


J.B. TRIMBLE, INC.
6445 Powers Ferry Rd.
Atlanta GA 30339
(770) 952-1022


GEORGIA
DEPARTMENT OF TRANSPORTATION
OPERATIONS DIVISION-OFFICE OF MAINTENANCE

DISTRICT 4 BRIDGE REPAIR (DECK REHABILITATION)
I-75 OVER NORFOLK SOU. RWY. & MOORE HWY.
CONSTRUCTION SEQUENCE - STAGE II

TIFT COUNTY NHS-M001-00 (993)

SCALE: AS SHOWN NOVEMBER 2003

| BY | REVISIONS | DATE |
|---|---|---|
| | | |

BRIDGE SHEET 3 OF 6

DESIGNED PJC | CHECKED GLE | REVIEWED EHG
DRAWN ITD | DESIGN GROUP MAINTENANCE | APPROVED STH

C:\DGN\313029\993\BR5\993B5CS2.DGN 10-20-03 ITD

2/20/2008 9:58:00 AM \\GDOT-DSN1\GOPLOT\QCF\Road_Design_Tiff-18x12_to_Tiff-36x24.qcf wnguyen C:\Documents and Settings\wnguyen\Desktop\M001993\Construction\Plan Sheet\M001993_0072.tif GO-RD-Plans-Review