STATE	PROJECT NUMBER	SHEET NO.	TOTAL SHEETS
GA.	NHS-M001-00 (993)	68	110

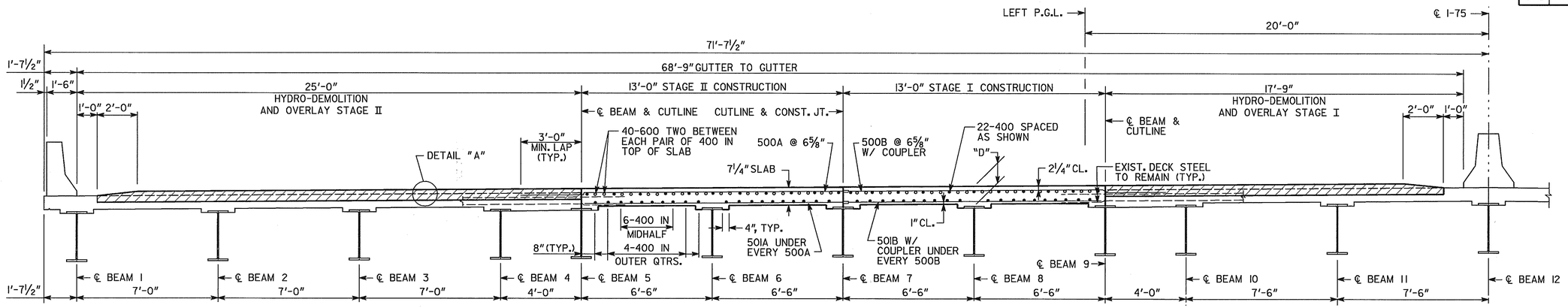

SECTION THRU SLAB

LEFT BRIDGE (LOOKING AHEAD)

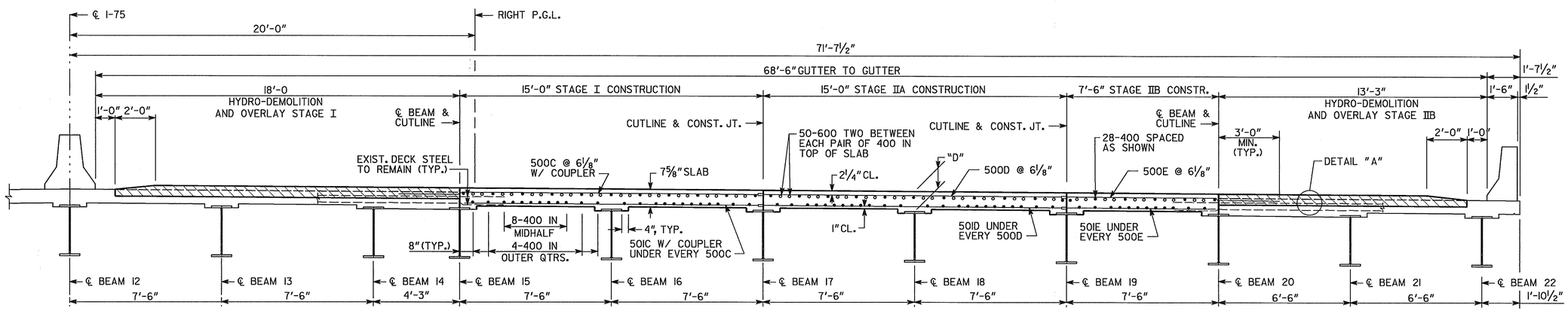

SECTION THRU SLAB

RIGHT BRIDGE (LOOKING AHEAD)

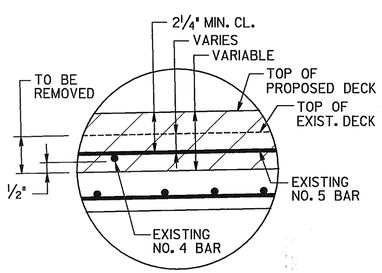

DETAIL "A"

NOTES

1. CLEARANCE OF REINFORCEMENT IS 2" UNLESS NOTED OTHERWISE.
2. CARE SHALL BE EXERCISED IN REMOVAL OF EXISTING CONCRETE TO MAKE CUTS VERTICAL AND TO RETAIN EXISTING REINFORCEMENT. EXISTING REINFORCEMENT BARS TO BE SPLICED INTO NEW WORK SHALL EXTEND A MINIMUM OF 1'-10" INTO NEW SECTION. ANY EXISTING REINFORCEMENT STEEL DAMAGED DURING REMOVAL SHALL BE REPLACED BY THE CONTRACTOR AT NO ADDITIONAL COST.
3. NON-CONTACT LAPS MAY BE USED BETWEEN EXISTING AND NEW TRANSVERSE DECK BARS.
4. DIMENSION "D" IS MEASURED FROM TOP OF SLAB TO TOP OF BEAM AT CENTERLINE OF BEARING. VARY "D" BETWEEN BEARINGS TO COMPENSATE FOR DEAD LOAD DEFLECTION AND VERTICAL CURVE. MAINTAIN CONSTANT SLAB THICKNESS AS SHOWN IN SECTIONS.
   "D" = 8" (LEFT BRIDGE)
   "D" = 8⅜" (RIGHT BRIDGE)

BRIDGE NO. 4

JBT J.B. TRIMBLE, INC.
6445 Powers Ferry Rd.
Atlanta GA 30339
(770) 952-1022

GEORGIA
DEPARTMENT OF TRANSPORTATION
OPERATIONS DIVISION-OFFICE OF MAINTENANCE

DISTRICT 4 BRIDGE REPAIR (DECK REHABILITATION)
I-75 OVER REMOVED NORFOLK SOUTHERN RWY.
DECK SECTIONS - SHEET 1

TIFT COUNTY NHS-M001-00 (993)

SCALE: AS SHOWN NOVEMBER 2003

DATE	REVISIONS	BY

BRIDGE SHEET 5 OF 6

DESIGNED PJC | CHECKED GLE | REVIEWED EHG
DRAWN ITD | DESIGN GROUP MAINTENANCE | APPROVED STH

C:\DGN\313029\993\BR4\993B4DS1.DGN 10-20-03 ITD

2/20/2008 9:58:10 AM \\GDOT-DSN1\GOPLOT\QCF\Road_Design_Tiff-18x12_to_Tiff-36x24.qcf wnguyen C:\Documents and Settings\wnguyen\Desktop\M001993\Construction\Plan Sheet\M001993_0068.tif GO-RD-Plans-Review