STATE	PROJECT NUMBER	SHEET NO.	TOTAL SHEETS
GA.	NHS-M001-00 (993)	66	110

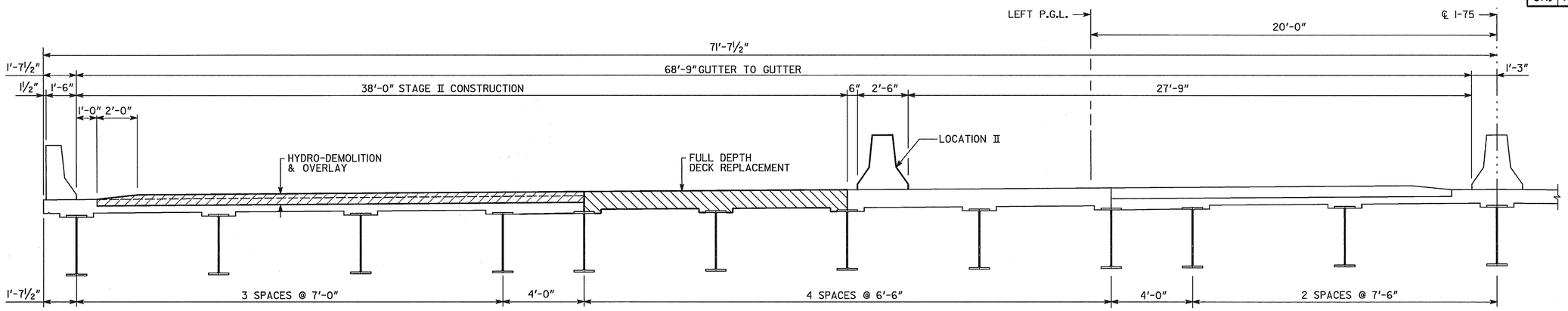

PARTIAL DECK SECTION

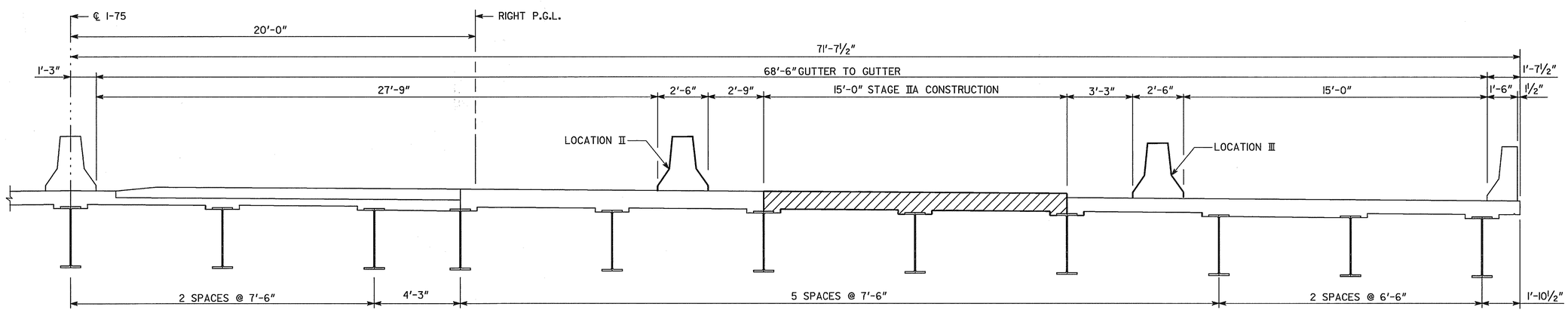

PARTIAL DECK SECTION - STAGE IIA

CONSTRUCTION SEQUENCE

STAGE II:

1. PLACE TEMPORARY BARRIER AT LOCATION II AND III. MAINTAIN TWO 12'-0" LANES ON THE LEFT BRIDGE AND TWO 12'-0" LANES OF ON THE RIGHT BRIDGE FOR THE MAINLINE. MAINTIAN ONE 12'-0" LANE OF TRAFFIC ON THE RIGHT BRIDGE FOR THE RAMP TRAFFIC.
2. REMOVE PORTIONS OF EXISTING DECK SLAB AS NECESSARY FOR STAGE IIA CONSTRUCTION.
3. CONSTRUCT STAGE IIA NEW DECK SLAB AND ENDWALL CHAMFERS.
4. MOVE TEMPORARY BARRIER TO LOCATION IV ON RIGHT BRIDGE. MAINTAIN THREE 12'-0" LANES OF TRAFFIC ON THE RIGHT BRIDGE.
5. CONSTRUCT STAGE IIB NEW DECK SLAB AND ENDWALL CHAMFERS.
6. PERFORM HYDRO-DEMOLITION AND OVERLAY OF THE REMAINING DECK.
7. RESEAL EXISTING DECK JOINTS.

NOTE: THE ABOVE SEQUENCE SHALL BE COORDINATED WITH ROADWAY OPERATIONS. ***SEE ROADWAY PLANS*** IN LIEW OF THE ABOVE CONSTRUCTION SEQUENCE, THE CONTRACTOR MAY SUBMIT, FOR APPROVAL BY THE ENGINEER, HIS OWN CONSTRUCTION SEQUENCE.

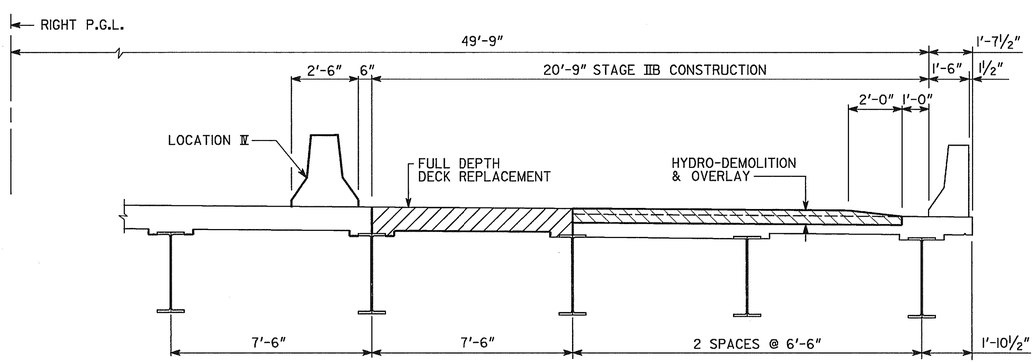

PARTIAL DECK SECTION - STAGE IIB

BRIDGE NO. 4

J.B. TRIMBLE, INC.
6445 Powers Ferry Rd.
Atlanta GA 30339
(770) 952-1022

GEORGIA
DEPARTMENT OF TRANSPORTATION
OPERATIONS DIVISION-OFFICE OF MAINTENANCE

DISTRICT 4 BRIDGE REPAIR (DECK REHABILITATION)
I-75 OVER REMOVED NORFOLK SOUTHERN RWY.
CONSTRUCTION SEQUENCE - STAGE II
TIFT COUNTY NHS-M001-00 (993)

SCALE: AS SHOWN NOVEMBER 2003

REVISIONS	BY	DATE

BRIDGE SHEET 3 OF 6

DESIGNED PJC | CHECKED GLE | REVIEWED EHG
DRAWN ITD | DESIGN GROUP MAINTENANCE | APPROVED STH

C:\DGN\313029\993\BR4\993B4CS2.DGN 10-20-03 ITD

2/20/2008 9:58:16 AM \\GDOT-DSN1\GOPLOT\QCF\Road_Design_Tiff-18x12_to_Tiff-36x24.qcf wnguyen C:\Documents and Settings\wnguyen\Desktop\M001993\Construction\Plan Sheet\M001993_0066.tif GO-RD-Plans-Review