STATE	PROJECT NUMBER	SHEET NO.	TOTAL SHEETS
GA.	NHS-M001-00 (993)	63	110

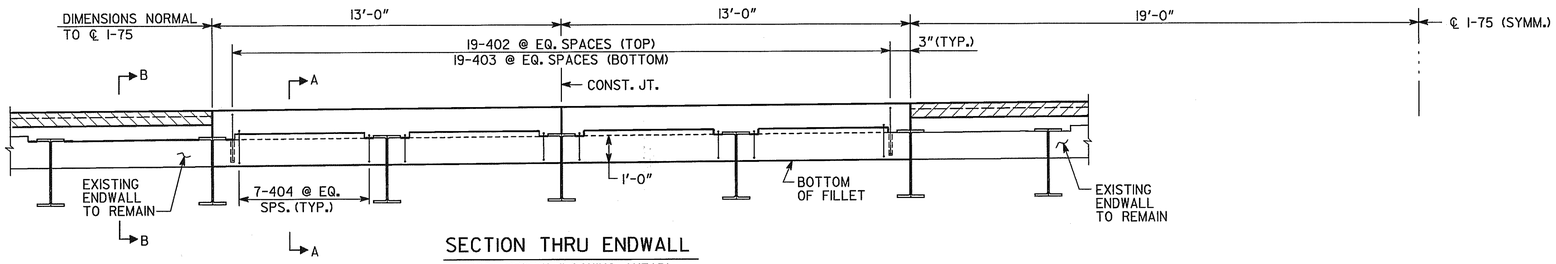

SECTION THRU ENDWALL

LEFT BRIDGE (LOOKING AHEAD)
RIGHT BRIDGE (LOOKING BACK)

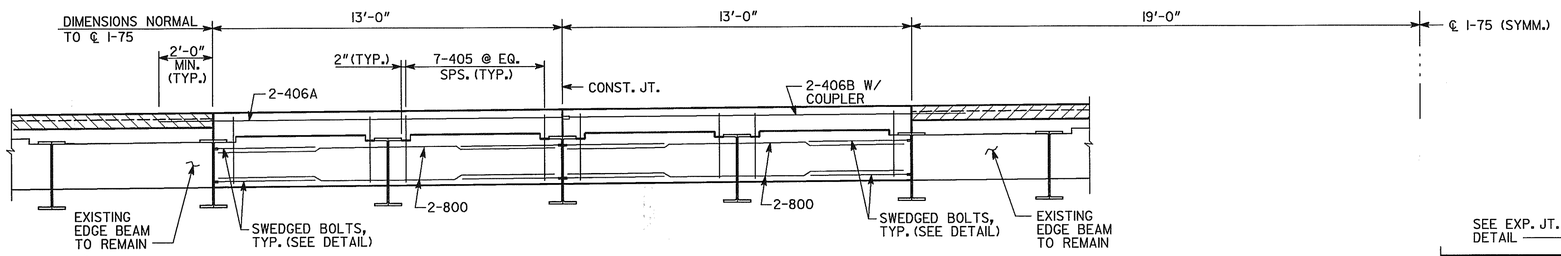

SECTION THRU EDGE BEAM

LEFT BRIDGE (LOOKING AHEAD)
RIGHT BRIDGE (LOOKING BACK)

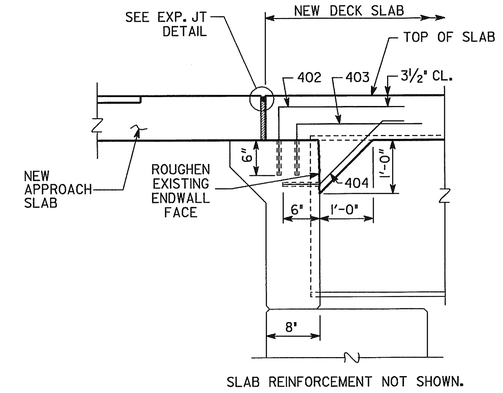

SLAB REINFORCEMENT NOT SHOWN.

SECTION A-A

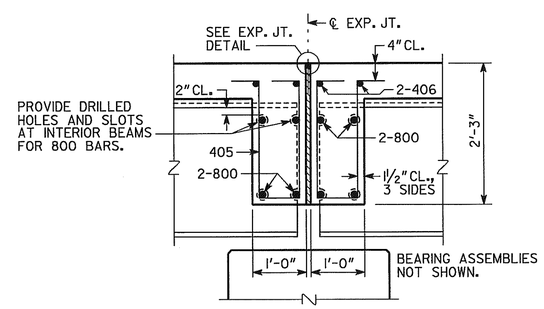

SLAB REINFORCEMENT NOT SHOWN.

SECTION THRU EDGE BEAM

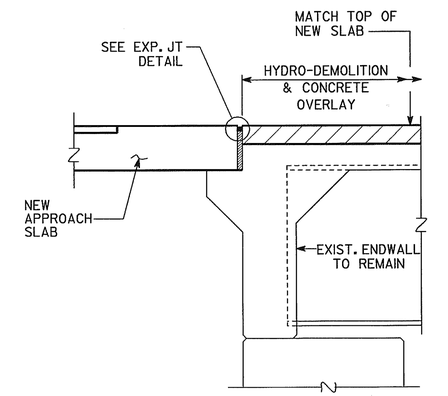

SLAB REINFORCEMENT NOT SHOWN.

SECTION B-B

REINFORCING SCHEDULE

LOCATION	NO. OF LOC.	MARK	LENGTH FT. IN.	NO. BARS REQ'D.	TYPE	A	G	B FT. IN.	C FT. IN.	D FT. IN.	E FT. IN.
SPAN 1	1										
		400A	33- 2	124	1						
		402	2-10	38	3			2- 0	0-10		
		403	2- 8	38	3			2- 0	0- 8		
		404	2- 9	56	34	6		0- 6	1- 3	0- 6	1- 3
		405	5- 1	56	31	4	4	0- 9	1- 9½	1- 9½	
		406A	15- 4	4	1						
		406B	15- 3	4	1						
		500A	16- 1	124	1						
		500B	16- 0	124	1						
		501A	12-11	124	1						
		501B	12-10	124	1						
		800	12- 9	16	1						
SPAN 2 OR 3	2										
		400B	41- 2	124	1						
		405	5- 1	112	31	4	4	0- 9	1- 9½	1- 9½	
		406A	15- 4	8	1						
		406B	15- 3	8	1						
		500A	16- 1	152	1						
		500B	16- 0	152	1						
		501A	12-11	152	1						
		501B	12-10	152	1						
		800	12- 9	32	1						

LOCATION	NO. OF LOC.	MARK	LENGTH FT. IN.	NO. BARS REQ'D.	TYPE	A	G	B FT. IN.	C FT. IN.	D FT. IN.	E FT. IN.
SPAN 4	1										
		400B	41- 2	124	1						
		402	2-10	38	3			2- 0	0-10		
		403	2- 8	38	3			2- 0	0- 8		
		404	2- 9	56	34	6		0- 6	1- 3	0- 6	1- 3
		405	5- 1	56	31	4	4	0- 9	1- 9½	1- 9½	
		406A	15- 4	4	1						
		406B	15- 3	4	1						
		500A	16- 1	152	1						
		500B	16- 0	152	1						
		501A	12-11	152	1						
		501B	12-10	152	1						
		800	12- 9	16	1						

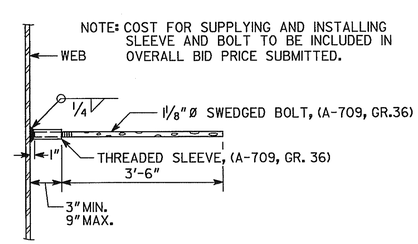

EDGE BEAM BAR LAP DETAIL

NOTES

1. CLEARANCE OF REINFORCEMENT IS 2" UNLESS NOTED OTHERWISE.

BRIDGE NO. 3

J.B. TRIMBLE, INC.
6445 Powers Ferry Rd.
Atlanta GA 30339
(770) 952-1022

GEORGIA
DEPARTMENT OF TRANSPORTATION
OPERATIONS DIVISION-OFFICE OF MAINTENANCE

DISTRICT 4 BRIDGE REPAIR (DECK REHABILITATION)
I-75 OVER S.R. 520 (U.S. 82)

DECK SECTIONS - SHEET 2

TIFT COUNTY NHS-M001-00 (993)

SCALE: AS SHOWN NOVEMBER 2003

DATE	REVISIONS	BY

BRIDGE SHEET 6 OF 6

DESIGNED PJC CHECKED GLE REVIEWED EHG
DRAWN ITD DESIGN GROUP MAINTENANCE APPROVED STH

C:\DGN\313029\993\BR3\993B3DS2.DGN 10-16-03 ITD

2/20/2008 9:58:25 AM \\GDOT-DSN1\GOPLOT\QCF\Road_Design_Tiff-18x12_to_Tiff-36x24.qcf wnguyen C:\Documents and Settings\wnguyen\Desktop\M001993\Construction\Plan Sheet\M001993_0063.tif GO-RD-Plans-Review