STATE	PROJECT NUMBER	SHEET NO.	TOTAL SHEETS
GA.	NHS-M001-00 (993)	57	110

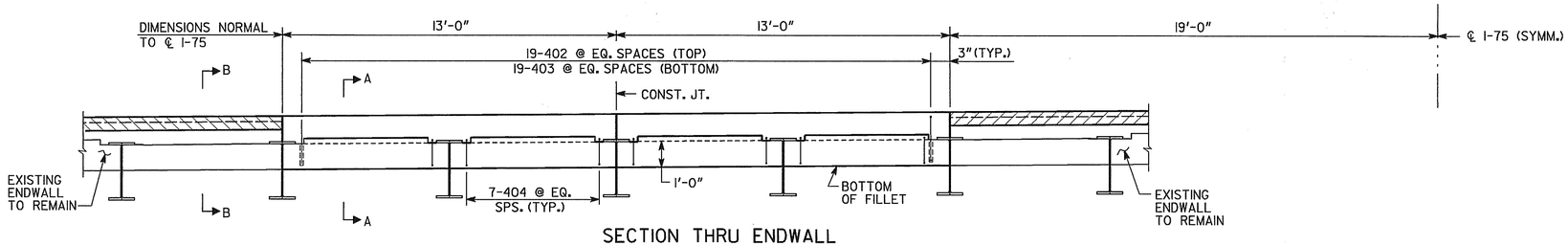

SECTION THRU ENDWALL

(LEFT BRIDGE LOOKING AHEAD)

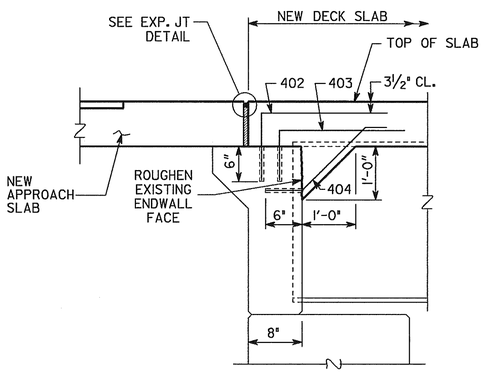

SLAB REINFORCEMENT NOT SHOWN.

SECTION A-A

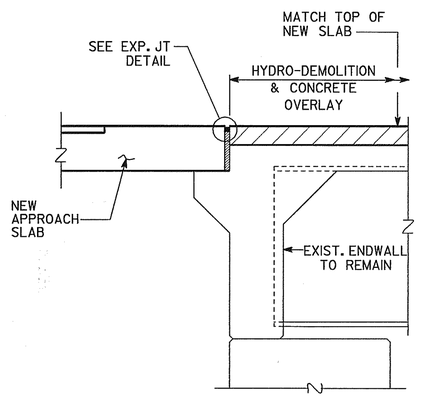

SLAB REINFORCEMENT NOT SHOWN.

SECTION B-B

NOTES

1. CLEARANCE OF REINFORCEMENT IS 2" UNLESS NOTED OTHERWISE.

BRIDGE NO. 2

J.B. TRIMBLE, INC.
6445 Powers Ferry Rd.
Atlanta GA 30339
(770) 952-1022

GEORGIA
DEPARTMENT OF TRANSPORTATION
OPERATIONS DIVISION-OFFICE OF MAINTENANCE

DISTRICT 4 BRIDGE REPAIR (DECK REHABILITATION)
I-75 OVER NORFOLK SOUTHERN RAILWAY
DECK SECTIONS SHEET 2

TIFT COUNTY NHS-M001-00 (993)

SCALE: AS SHOWN NOVEMBER 2003

BY	REVISIONS	DATE

BRIDGE SHEET 6 OF 6

DESIGNED PJC DRAWN ITD CHECKED GLE DESIGN GROUP MAINTENANCE REVIEWED EHG APPROVED STH

C:\DGN\313029\993\BR2\993B2DS2.DGN 9-30-03 ITD

2/20/2008 9:58:40 AM \\GDOT-DSN1\GOPLOT\QCF\Road_Design_Tiff-18x12_to_Tiff-36x24.qcf wnguyen C:\Documents and Settings\wnguyen\Desktop\M001993\Construction\Plan Sheet\M001993_0057.tif GO-RD-Plans-Review