STATE	PROJECT NUMBER	SHEET NO.	TOTAL SHEETS
GA.	NHS-M001-00 (992)	26	28

VOID

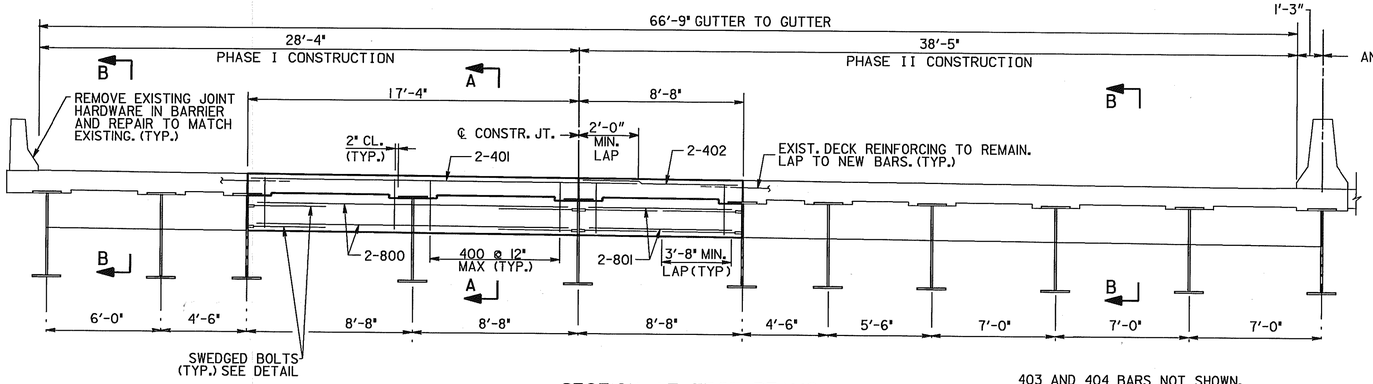

SECTION AT EDGE BEAMS

(LEFT BRIDGE)

403 AND 404 BARS NOT SHOWN.

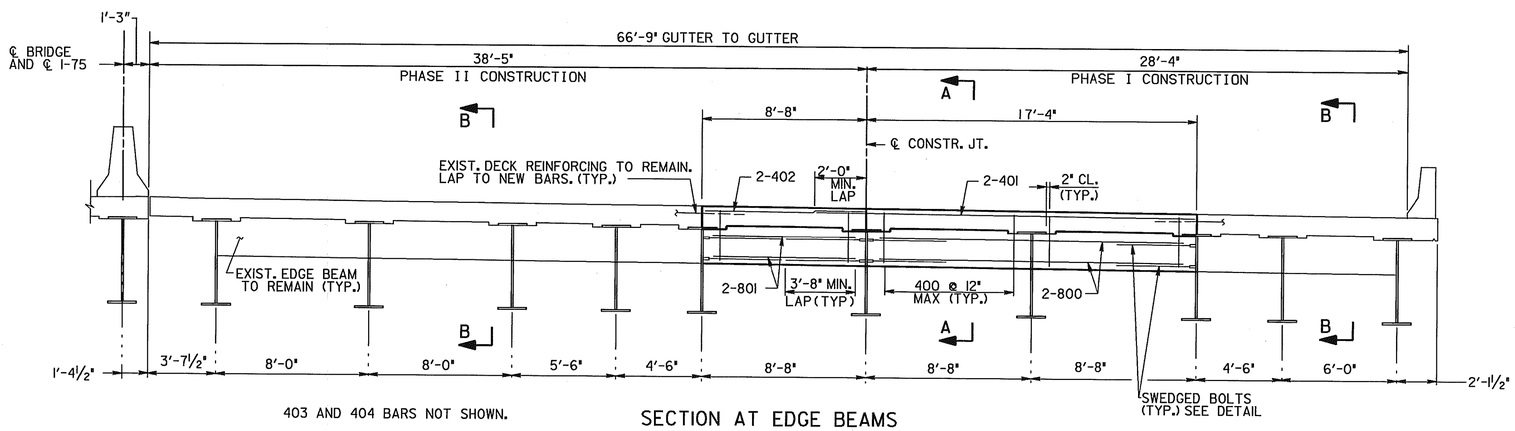

403 AND 404 BARS NOT SHOWN.

SECTION AT EDGE BEAMS

(RIGHT BRIDGE)

REINFORCING SCHEDULE

LOCATION	NO. OF LOC.	MARK	LENGTH FT.	LENGTH IN.	NO. BARS REQ'D.	TYPE	A	G	B FT.	B IN.	C FT.	C IN.	D FT.	D IN.
BENT 1														
		400A	5	11	60	31	4	4	1	0	2	1	2	1
		401A	23	7	8	1								
		402A	11	0	8	1								
		403A	16	6	4	1								
		404A	41	0	4	1								
		800A	22	4	8	1								
		801A	11	0	8	1								
BENT 4	1													
		400B	5	11	54	31	4	4	1	0	2	1	2	1
		401B	22	6	8	1								
		402B	10	0	8	1								
		403B	15	6	4	1								
		404B	37	6	4	1								
		800B	20	4	8	1								
		801B	10	0	8	1								

CONSTRUCTION SEQUENCE

1. PLACE TEMPORARY TRAFFIC CONTROL MEASURES FOR PHASE I CONSTRUCTION. MAINTAIN TWO LANES OF TRAFFIC.
2. SAWCUT AND REMOVE EXISTING DECK SLAB, BACKWALL AND BARRIER CONCRETE TO LIMITS SHOWN ON PLANS.
3. REMOVE EXISTING EDGE BEAMS.
4. CLEAN EXISTING DECK AND BACKWALL REINFORCEMENT TO REMAIN IN PLACE.
5. PLACE NEW EDGE BEAM AND BACKWALL REINFORCEMENT.
6. FORM AND CAST EDGE BEAM, DECK SLAB, BACKWALL AND BARRIER CONCRETE.
7. REPEAT STEPS I THROUGH 6 FOR PHASE II CONSTRUCTION.
8. COMPLETE DECK OVERLAY, HEADER RECONSTRUCTION AND JOINT SEALING OPERATIONS.

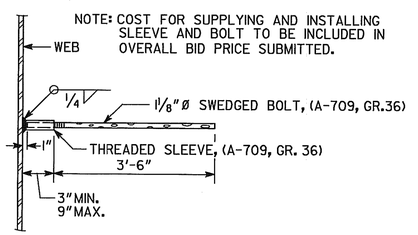

EDGE BEAM BAR LAP DETAIL

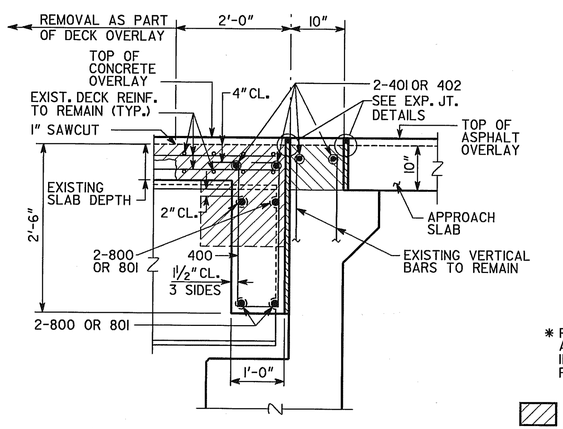

SECTION A-A

(BENTS 1 & 4)

* PROVIDE HOLES AND SLOTS IN INTERIOR BEAMS FOR #8 BARS.

DENOTES CONCRETE TO BE REMOVED

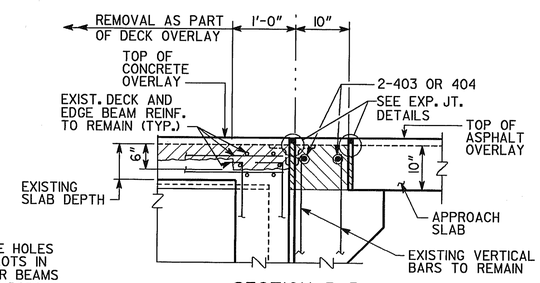

SECTION B-B

(BENTS 1 & 4)

BRIDGE NO. 1

J.B. TRIMBLE, INC.
6445 Powers Ferry Rd.
Atlanta GA 30339
(770) 952-1022

GEORGIA
DEPARTMENT OF TRANSPORTATION
OPERATIONS DIVISION-OFFICE OF MAINTENANCE

DISTRICT 6 BRIDGE REPAIR (DECK OVERLAY)

I-75 OVER C.R. 15 (SCRUGGS ROAD)

CATOOSA COUNTY NHS-M001-00 (992)

REVISIONS	BY	DATE

SCALE: AS SHOWN AUGUST 2003

DESIGNED ARK CHECKED GLE REVIEWED EHG
DRAWN ITD DESIGN GROUP MAINTENANCE APPROVED STH

BRIDGE SHEET 3 OF 3

C:\DGN\313029\992\992 5DS.DGN 2-17-01 ITD

2/20/2008 9:38:46 AM \\GDOT-DSN1\GDPLOT\GCF\Road Design Tiff-18x12 to Tiff-36x24.gcf wnguyen G:\Documents and Settings\wnguyen\Desktop\M001992\Construction\Plan Sheet\M001992 0026.tif GO-RD-Plans-Review