STATE	PROJECT NUMBER	SHEET NO.	TOTAL SHEETS
GA.	NHS-M001-00(992)	8	28

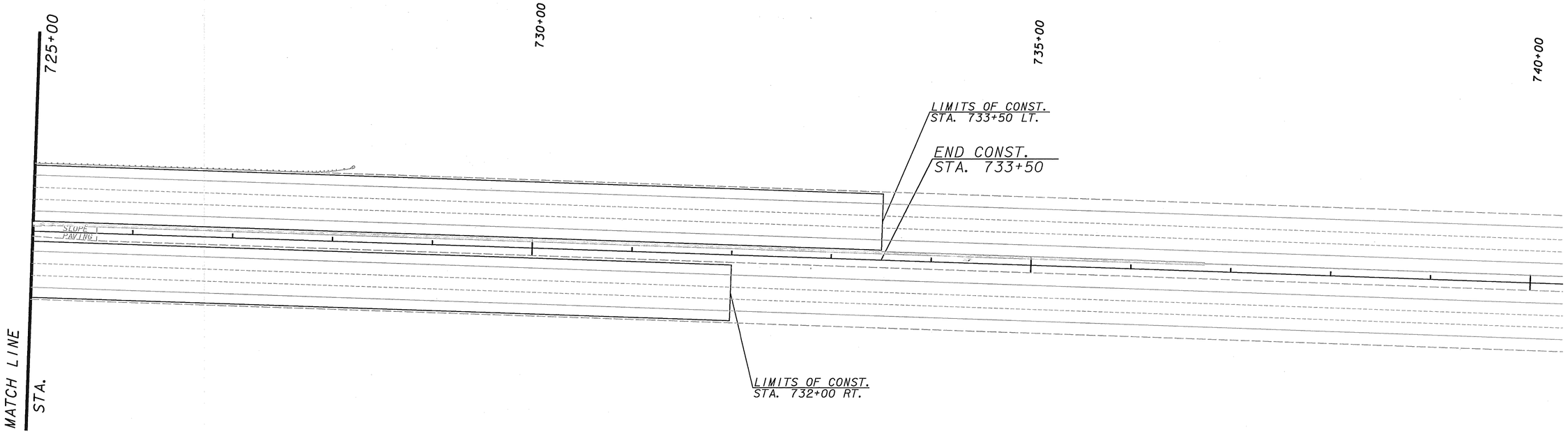

SCALE IN FEET
0 50 100 200

PROPERTY AND EXISTING R/W LINE	BEGIN LIMIT OF ACCESS.....BLA
REQUIRED R/W LINE	END LIMIT OF ACCESS.....ELA
CONSTRUCTION LIMITS	LIMIT OF ACCESS
EASEMENT FOR CONSTR & MAINTENANCE OF SLOPES	R/W AND LIMIT OF ACCESS
EASEMENT FOR CONSTR OF SLOPES	
EASEMENT FOR CONSTR OF DRIVES	

J.B. TRIMBLE, INC.
6445 Powers Ferry Road,
Suite 100
Atlanta, GA 30339

DATE	REVISIONS	DATE	REVISIONS

GEORGIA
DEPARTMENT OF TRANSPORTATION
CONSTRUCTION PLAN
PROJECT: NHS-M001-00(992)
COUNTY: CATOOSA
DRAWING 3 OF 3

DGN$SPECIFICATION$$$$$$$$$$$$$$$$$$$$$$
SHOWDATETIME$$$$$$
K:\TRA*-3029\DGN\RDY\