STATE	PROJECT NUMBER	SHEET NO.	TOTAL SHEETS
GA.	STP-M001-00(972)	9	23

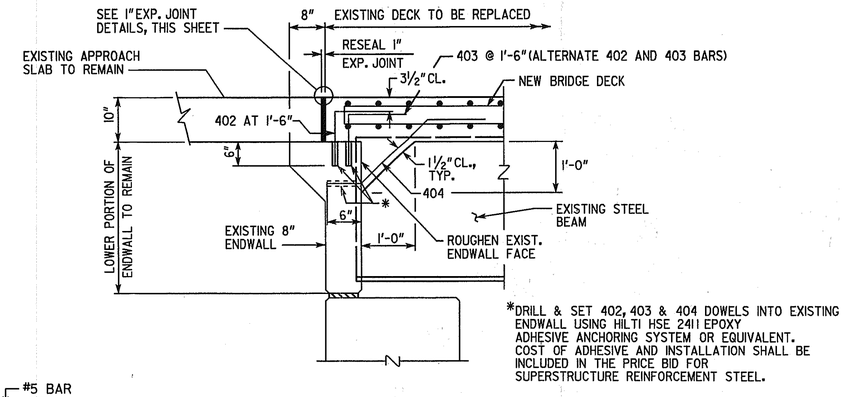

*DRILL & SET 402, 403 & 404 DOWELS INTO EXISTING ENDWALL USING HILTI HSE 2411 EPOXY ADHESIVE ANCHORING SYSTEM OR EQUIVALENT. COST OF ADHESIVE AND INSTALLATION SHALL BE INCLUDED IN THE PRICE BID FOR SUPERSTRUCTURE REINFORCEMENT STEEL.

SECTION AT ENDWALL

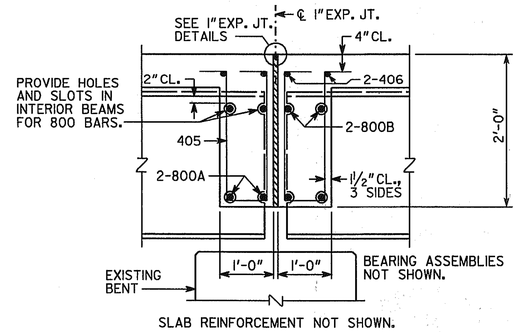

SECTION THRU EDGE BEAM

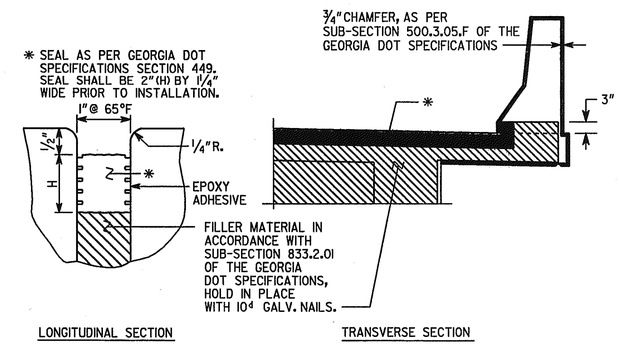

1" EXPANSION JOINT DETAILS

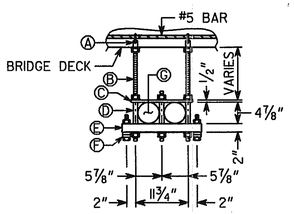

2 CONDUIT

Ⓐ ¾"LOOP INSERT FOR ¾"- 10 ROD.
Ⓑ ¾"- 10 GALVANIZED MACHINE ROD
Ⓒ ½"X 2"X 13¾"P.V.C. FLAT BAR.
Ⓓ 1"X 4⅞"P.V.C. SPACER TUBE.
Ⓔ ¼"X 2"X 2"X 17¾"FIBERGLASS TUBE.
Ⓕ STRAND CLAMP
Ⓖ 4"Ø FIBERGLASS CONDUIT

DETAIL OF HANGER FOR TELEPHONE CONDUIT

NOTE: PLACE HANGER ATTACHMENTS AT INTERVALS OF UP TO 15 FT.

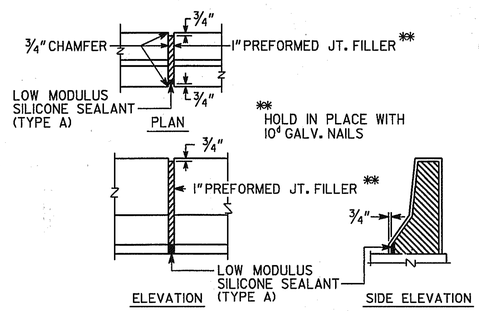

DETAILS OF 1" EXPANSION JOINT IN BARRIER

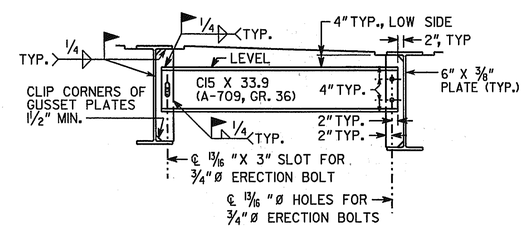

DIAPHRAGM DETAILS

NOTE: WELD DIAPHRAGMS BEFORE DECK IS POURED.

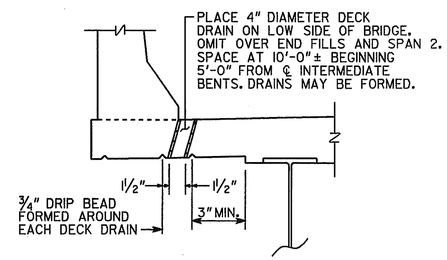

DECK DRAIN DETAIL

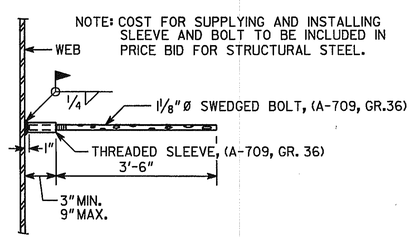

EDGE BEAM BAR LAP DETAIL

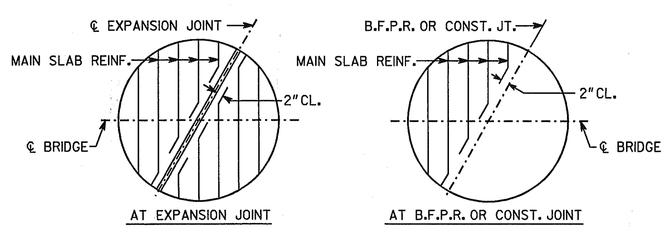

BARS ARE DETAILED IN BAR DETAILS AS EQUIVALENT FULL LENGTH BARS.

BAR BENDING DETAILS AT SKEWED JOINTS

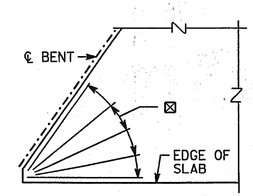

⊠ 5-504 IN EACH ACUTE CORNER SEE BRIDGE SHEET 6 FOR PLACEMENT.

SKEWED CORNER DETAIL

BRIDGE NO. 1

Post, Buckley, Schuh & Jernigan, Inc.
CONSULTING ENGINEERS and PLANNERS

GEORGIA
DEPARTMENT OF TRANSPORTATION
PRECONSTRUCTION DIVISION-OFFICE OF BRIDGE DESIGN

MISCELLANEOUS DETAILS
SR 2/US 41 OVER
SOUTH CHICKAMAUGA CREEK
DECK REPLACEMENT

CATOOSA COUNTY STP-M001-00(972)

SCALE: NO SCALE NOVEMBER 2002

DESIGNED CMM CHECKED HWC REVIEWED
DRAWN TLH LIAISON ENGINEER APPROVED

REVISIONS DATE BY

BRIDGE SHEET 5 OF 7

12-NOV-2002
L:\S060280\04 - Chicamauga_Catoosa\Final\MiscDet.dgn