5/31/01 11:14:37 AM \\GDOT-DSN1\GOPLOT\OCF\gord_oce9600_mylar.qcf darbyd M:\David\working\4961.prt

STATE	PROJECT NUMBER	SHEET NO.	TOTAL SHEETS
GA.	STP-M001-00(951)	11	12

PRECAST CONCRETE BARRIER DETAILS

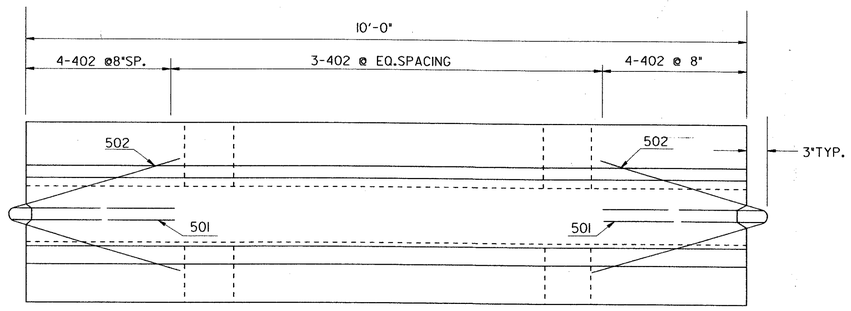

PLAN

NOTE:
BARRIER SECTIONS SHALL BE CONNECTED TOGETHER WITH THE 1¼" DIA. A-307 DOUBLE HEX CONNECTION BOLT. THE BOTTOM NUT & WASHER SHALL BE MAINTAINED BY THE CONTRACTOR FOR THE DURATION OF THE BARRIER INSTALLATION.

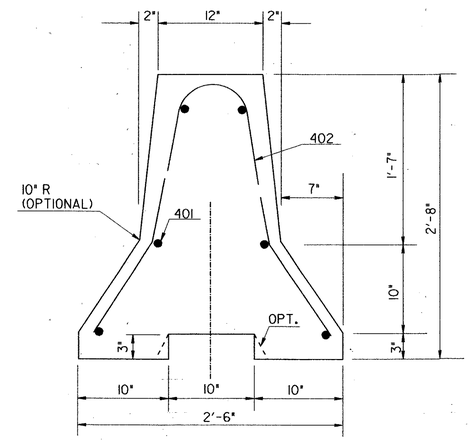

END ELEVATION

GENERAL NOTES:

1-MATERIALS: CLASS 'A' CONCRETE AND 40 STEEL.

2-SEE GA. SPECIFICATIONS FOR BASIS OF PAYMENT AND METHOD NO. .

3-REINFORCEMENT, HAVING AN AREA AT LEAST EQUAL TO REBARS SHOWN, MAY BE USED AS AN ALTERNATE.

4-BARRIERS SHALL BE PLACED SUCH THAT OPENINGS BETWEEN INDIVIDUAL SECTIONS SHALL BE KEPT TO A MINIMUM.

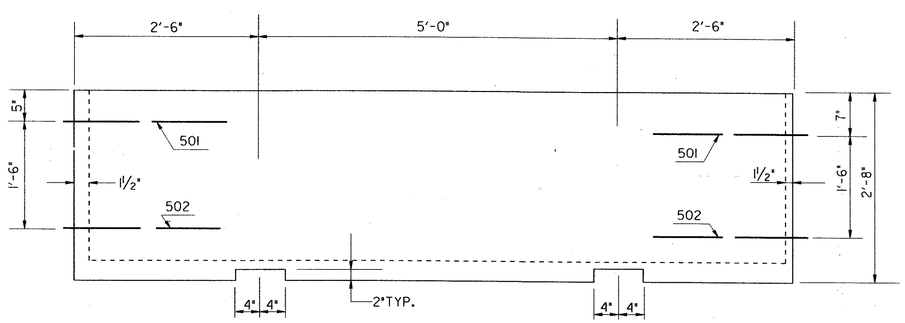

SIDE VIEW

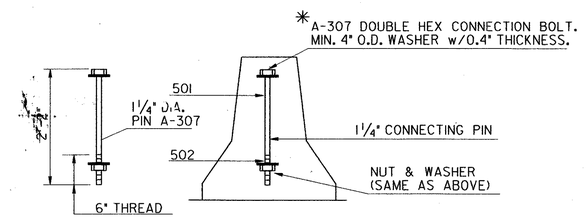

PIN CONNECTION

*AN ALTERNATE CONNECTING PIN WITH A FUSED NUT ON THE TOP THREADED PORTION AND NUT AND WASHER AS SPECIFIED ON THE BOTTOM MAY ALSO BE USED.

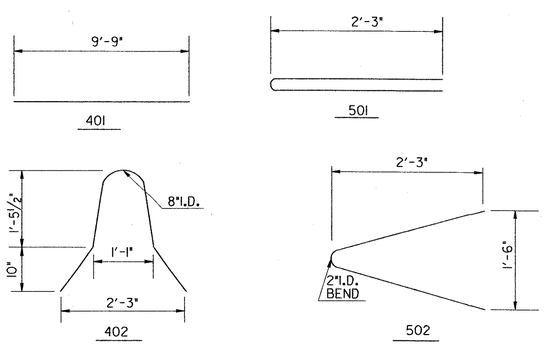

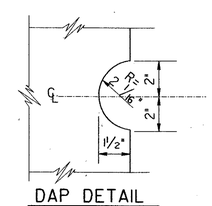

DAP DETAIL

REV. REBAR & PIN CONN.	5-2-01	DEPARTMENT OF TRANSPORTATION STATE OF GEORGIA
COTTER PIN REQUIREMENT	5-10-96	STANDARD DETAILS OF PRECAST TEMPORARY BARRIERS
REVISION	DATE	NO SCALE — AUG., 1995
R.M.J.	BY	DES. ___ DRW. ___ TRA. ___ CHK. ___ (SUBMITTED) STATE ROAD & AIRPORT DESIGN ENGR. (APPROVED) CHIEF ENGINEER — NUMBER 4961

5/31/01 11:14:37 AM \\GDOT-DSN1\GOPLOT\OCF\gord_oce9600_mylar.qcf darbyd M:\David\working\4961.prt GO-RDB