STATE	PROJECT NUMBER	SHEET NO.	TOTAL SHEETS
GA.	NHS-M001-00(732)	143	159

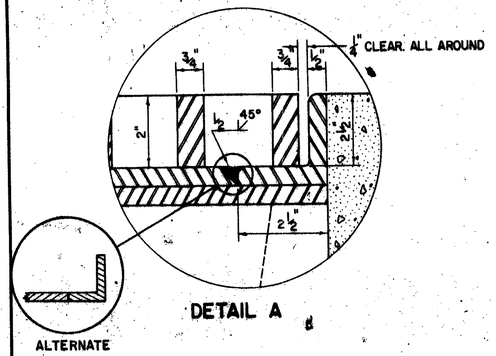

DETAIL A

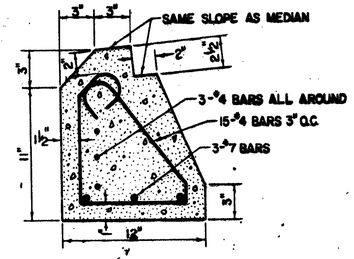

DETAIL B

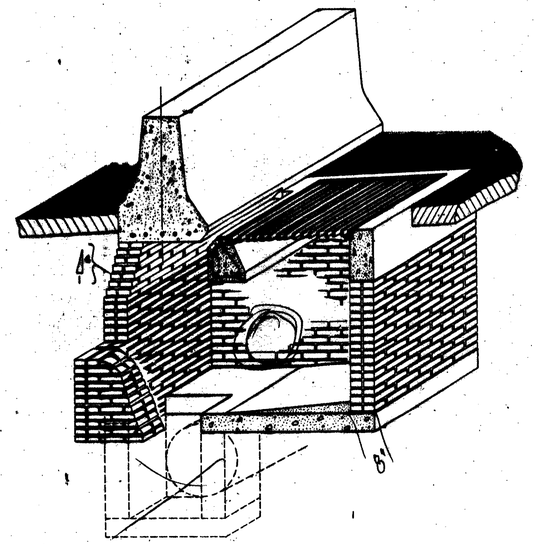

SINGLE GRATE

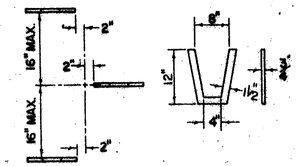

CAST IRON STEPS

STEPS ARE REQ. ON ALL STRUCTURES WHERE H IS GREATER THAN 4'-0"

THE NUMBER AND LOCATION OF STEPS WILL BE AS DIRECTED BY THE ENGINEER

AN ALTERNATE STEP MAY BE SUBSTITUTED IF APPROVED BY THE LABORATORY

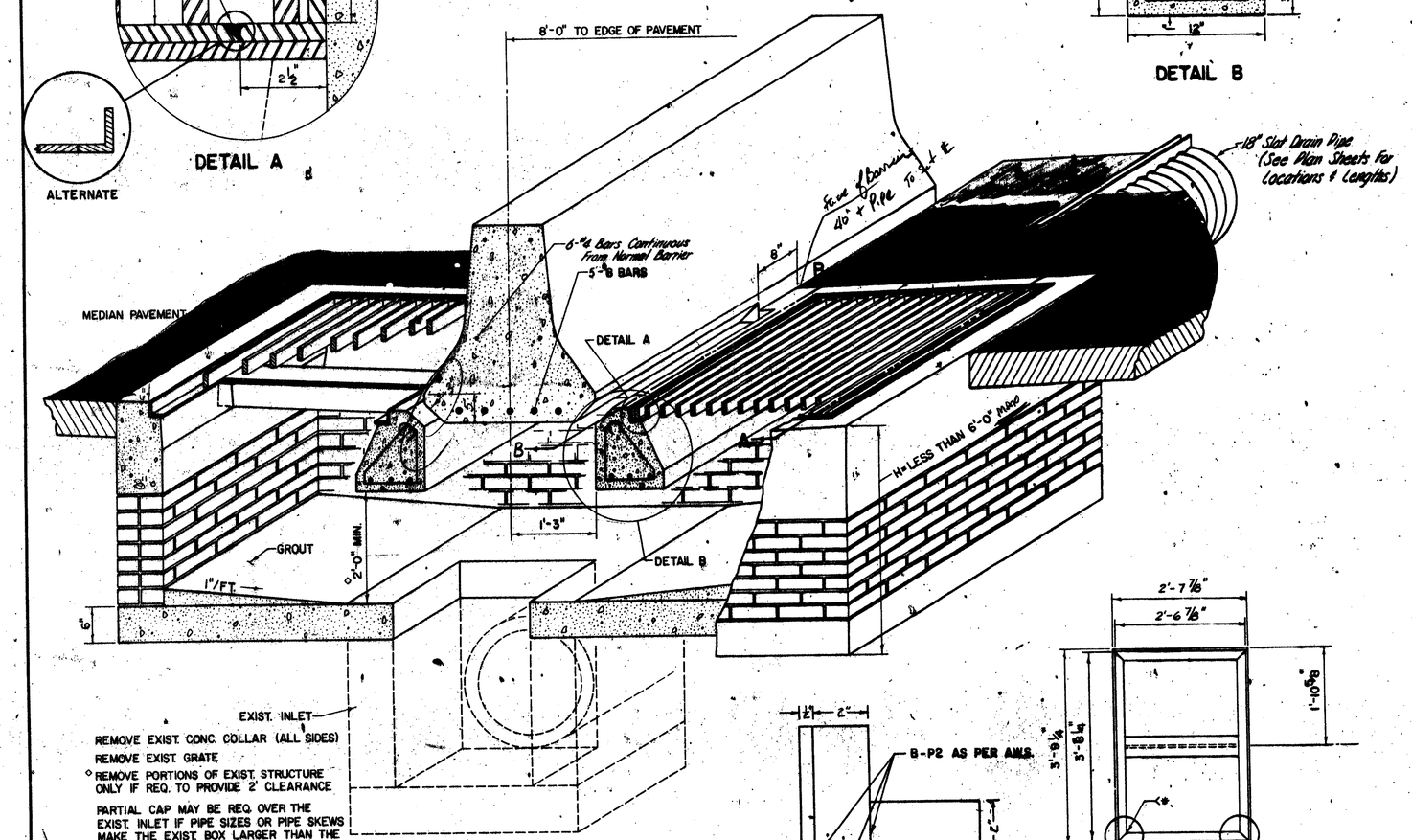

DOUBLE GRATE

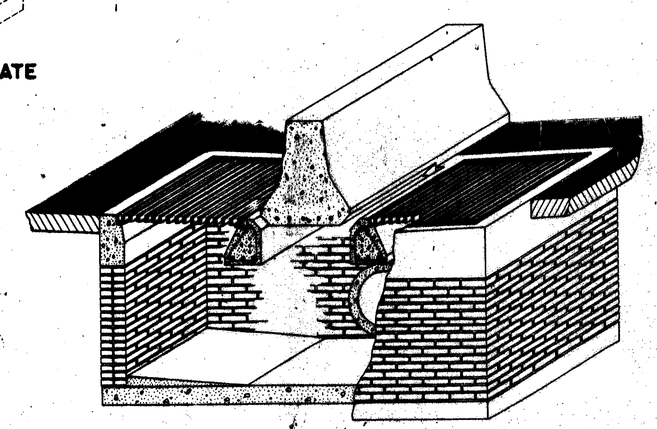

DOUBLE GRATE
(NEW CONSTRUCTION)

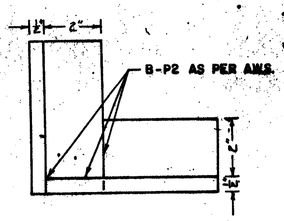

DETAIL C
ALTERNATE CORNER DETAIL

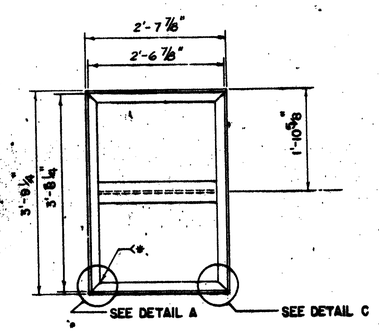

FRAME

* B-P2 AS PER A.W.S. SPECS. TYP. ALL FOUR CORNERS OF FRAME & GRATE

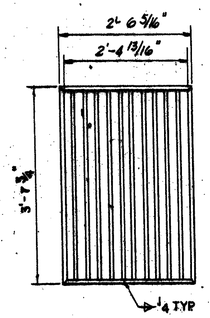

GRATE

12 BARS @ 3/4" = 9"
11 SPACES @ 1 15/16" = 1'-9 5/16"
2'-6 5/16"

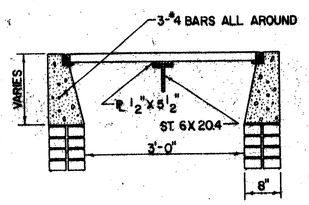

SECTION A-A

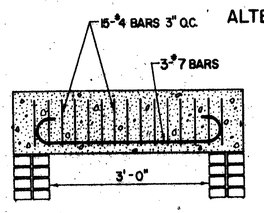

SECTION B-B

GENERAL NOTES, MEDIAN DROP INLET

1. STEEL FOR FRAME AND GRATE SHALL BE A-36, IN ACCORDANCE WITH A.S.T.M. SPECIFICATIONS.
2. ALL STEEL, EXCEPT REINFORCING STEEL, SHALL BE HOT-DIPPED GALVANIZED AFTER FABRICATION, IN ACCORDANCE WITH SPECIFICATION A 123-71.
3. DRILL 1/4" DIA. HOLE IN ONE CORNER OF THE FRAME TO PREVENT GALVANIZING MAT'L. BUILD-UP.
4. SEE SECTION 668 OF DEPT. OF TRANSPORTATION STANDARD SPECIFICATIONS FOR MAT'LS., CONSTRUCTION DETAILS, MEASUREMENTS, & PAYMENT FOR THIS STRUCTURE EXCEPT AS NOTED ABOVE.
5. REINFORCING STEEL FOR MEDIAN BARRIER SHALL BE EXTENDED 3'-6" MIN. INTO NORMAL SECTION.
6. FOR DIMENSIONS OF MEDIAN BARRIER NOT SHOWN, SEE MEDIAN BARRIER SHEET.
7. INLETS SHALL BE CLASSED AS GROUP I IN THAT THEIR SIZE IS INDEPENDENT OF THE PIPE SIZES.
8. CONTRACTOR HAS THE OPTION TO SUBSITUTE A-588 STEEL FOR FRAME & GRATE. CONTRACTOR HAS THE OPTION TO USE BRICK INSTEAD OF CONCRETE FOR THE STRUCTURE FLOOR. (THICKNESS SHALL BE 3 BRICKS)
9. *CONTRACTOR HAS THE OPTION TO PRE-CAST BEAM SHOWN IN DETAIL B.*

GEORGIA DEPARTMENT OF TRANSPORTATION
OFFICE OF URBAN & MULTI-MODAL DESIGN

SPECIAL DESIGN DROP INLET
TYPE 2
DOUBLE & SINGLE GRATE

SCALE: None *MODIFIED*

DESIGNED:
DRAWN: *I.G.S.*
CHECKED: