STATE	PROJECT NUMBER	SHEET NO.	TOTAL SHEETS
GA.	NHS-M001-00(732)	111	159

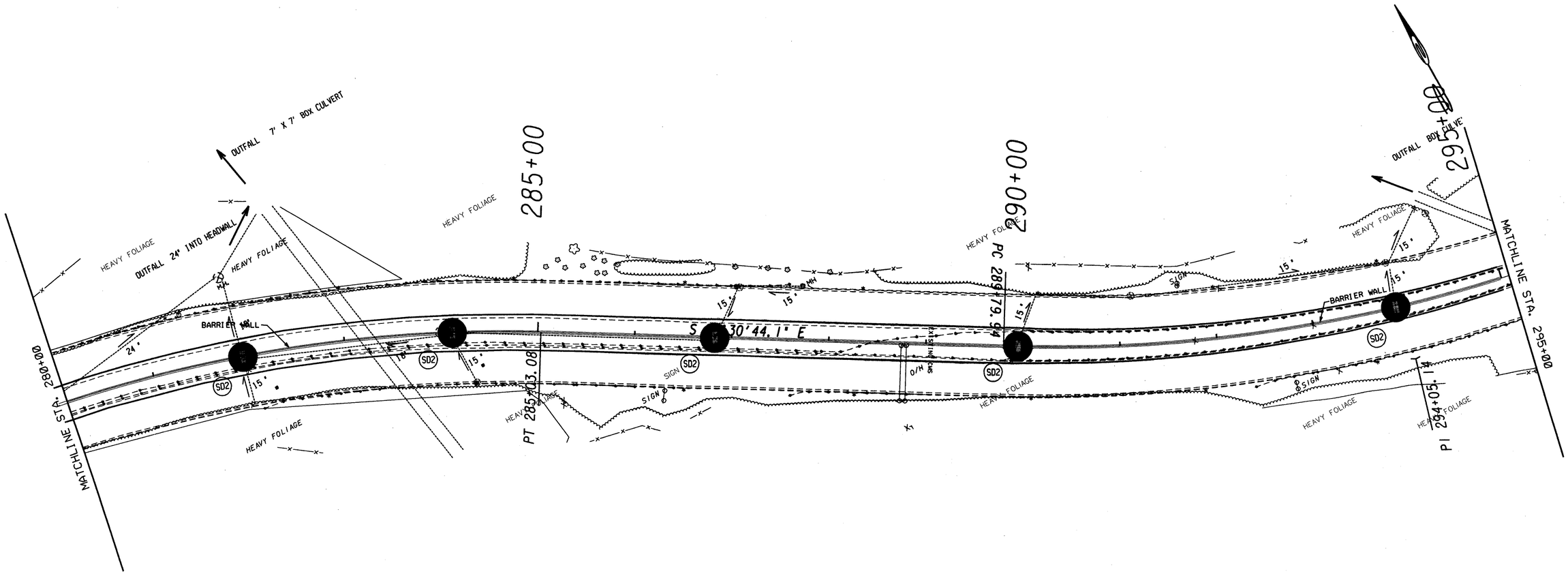

SCALE IN FEET
0 50 100 200

STATE ROUTE 166 - LANGFORD PKWY
MEDIAN IMPROVEMENT

EROSION CONTROL

SHEET NO.
14 OF 18