STATE	PROJECT NUMBER	SHEET NO.	TOTAL SHEETS
GA.	NHS-M001-00(732)	57	159

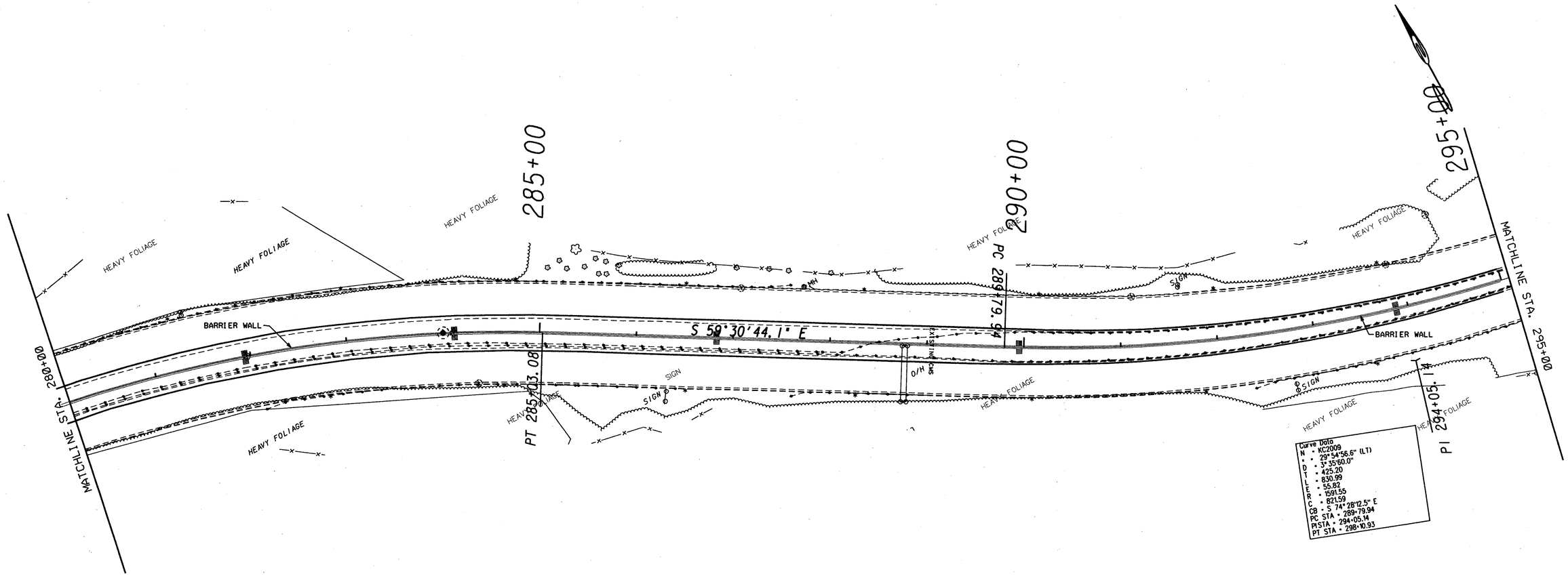

SCALE IN FEET

0 50 100 200

STATE ROUTE 166 - LANGFORD PKWY
MEDIAN IMPROVEMENT

UTILITY SHEET

SHEET NO.
14 OF 18