STATE	PROJECT NUMBER	SHEET NO.	TOTAL SHEETS
GA.	NHS-M001-00(732)	24	159

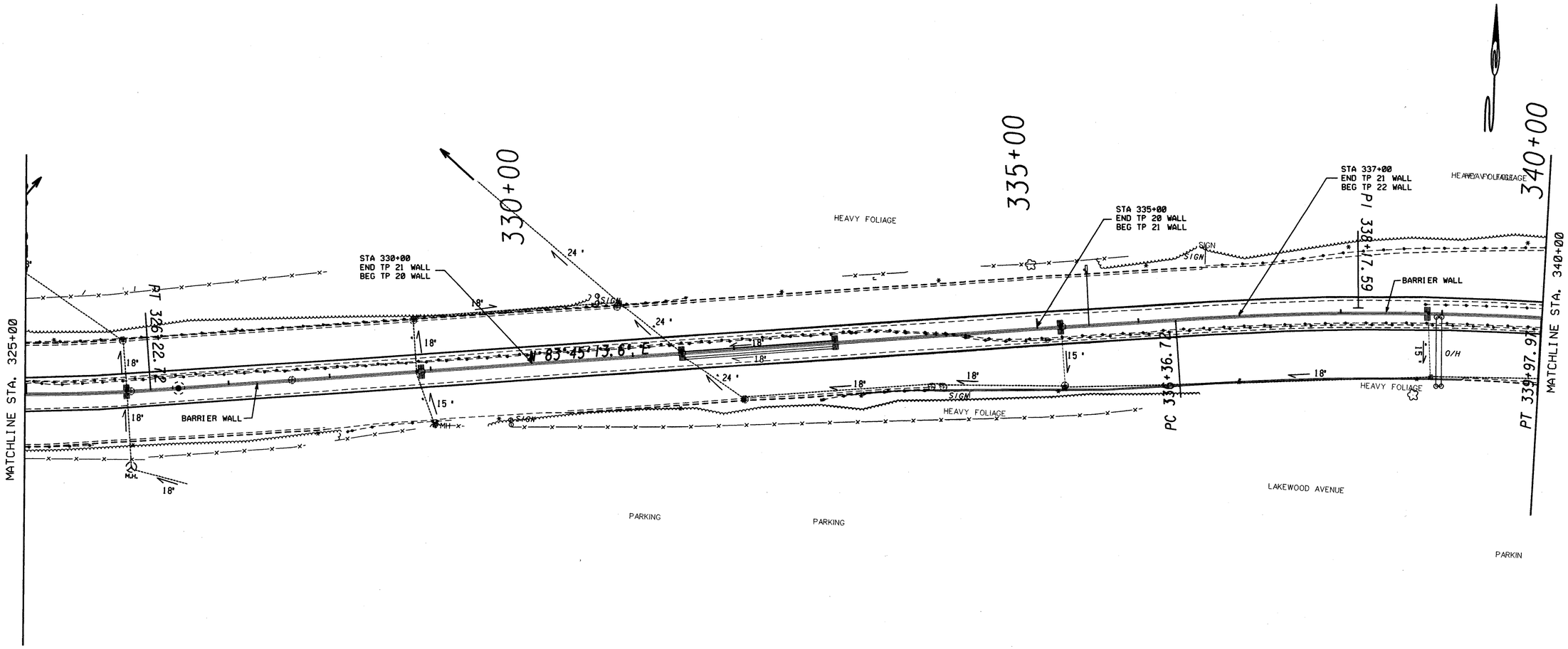

STA 325+99
GA STD 5001 M-2 GP1
REQ'D DROP INLET

ATMS POLE STA. 326+50

STA 328+86
GA STD 5001 M-2 GP1
REQ'D DROP INLET

STA 331+49
GA STD 5001 M-2 GP1
REQ'D DROP INLET

STA 331+49 TO 333+00 REQ'D
151 FT OF CONCRETE 18" STORM DRAIN PIPE

STA 333+00
GA STD 5001 M-2 GP1
REQ'D DROP INLET

STA 335+23
GA STD 5001 M-2 GP1
REQ'D DROP INLET

STA 335+51
INSTALLATION OF TRAFFIC
DETECTION LOOP SYSTEM WITH
1.5 INCH PVC CONDUIT THOUGH
BASE OF MEDIAN WALL

STA 338+87
GA STD 5001 M-2 GP1
REQ'D DROP INLET

SCALE IN FEET
0 50 100 200

STATE ROUTE 166 - LANGFORD PKWY
MEDIAN IMPROVEMENT

PLAN SHEET

SHEET NO.
17 OF 18