STATE	PROJECT NUMBER	SHEET NO.	TOTAL SHEETS
GA.	NHS-M001-00(732)	5A	159

FOR USE ON CONSTRUCTION
ADDED TO PLANS 11-15-02

TYPICAL SECTIONS

ALLOWABLE RANGE TABLE

NOTE: FOR THIS PROJECT, CROSS SLOPES THAT ARE ADJUSTED TO "BEST FIT" EXISTING PAVEMENT SLOPES ARE SUBJECT TO THE FOLLOWING LIMITS.

A. NORMAL CROWN

SECTION WITH GRADES 0.5% OR GREATER	SECTION WITH GRADES LESS THAN 0.5%
1.5 % - MINIMUM	1.5 % - MINIMUM
2.0 % - DESIRABLE	2.0 % - DESIRABLE
2.5 % - MAXIMUM	3.0 % - MAXIMUM

B. SUPERELEVATION RATE

SE RATE SHOWN ON PLANS OR SE RATE EXISTING IN FIELD WHICH EVER IS GREATER.

C. SUPERELEVATION TRANSITION LENGTH (LENGTH FROM FLAT POINT TO FULL CORRESPONDING DIFFERENCE IN GRADE BETWEEN PIVOT POINT AND EDGE OF PAVEMENT)

	RATE OF CHANGE	
MINIMUM	1:150	0.67%
DESIRABLE	1:200	0.50%
MAXIMUM	1:300	0.33%

*LENGTH SHALL BE SET TO AVOID CREATING A FLAT GUTTER GRADE ON LOW SIDE AND TO AVOID FLAT CROSS SLOPES AT OR NEAR THE LOW POINT OF VERTICAL CURVES.

D. POSITION OF SUPERELEVATION TRANSITION LENGTH ON SIMPLE CURVES

50% OF TRANSITION INSIDE CURVE - MAXIMUM
33% OF TRANSITION INSIDE CURVE - DESIRABLE
20% OF TRANSITION INSIDE CURVE - MINIMUM

NOTE: CROWN WIPE OUT SHALL BE AT THE SAME RATE AS THE SE TRANSITION

E. SMOOTHING OF BREAKS IN EDGE PROFILE AT BEGIN AND END OF TRANSITION SHALL BE ACCOMPLISHED BY VERTICAL CURVE WITH A MINIMUM LENGTH IN FEET. EQUAL TO THE SPEED DESIGN IN MPH.

THE TYPICALS BELOW APPLIES TO
STATIONS 297+00 TO 312+00
STATIONS 314+55 TO 317+00

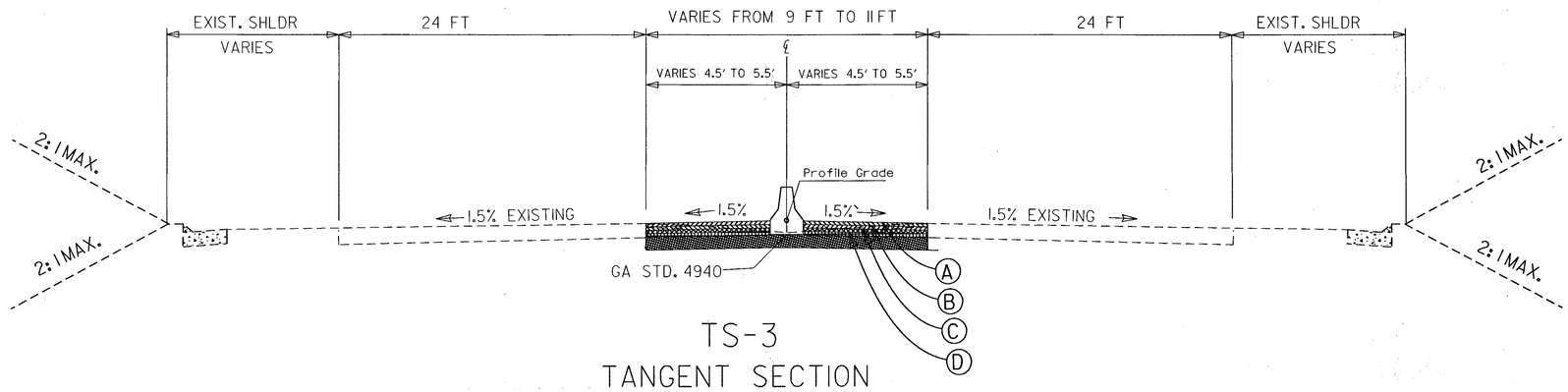

TS-3
TANGENT SECTION

THE TYPICAL BELOW APPLIES TO
STATIONS 312+10 TO 314+55

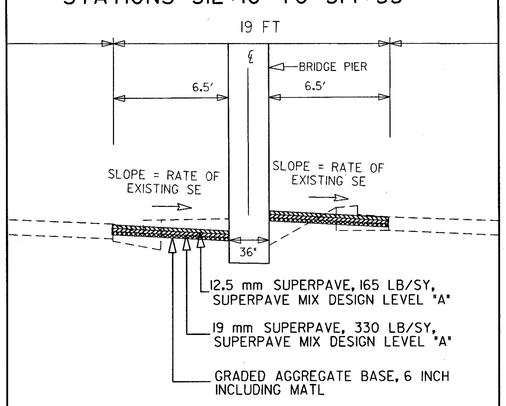

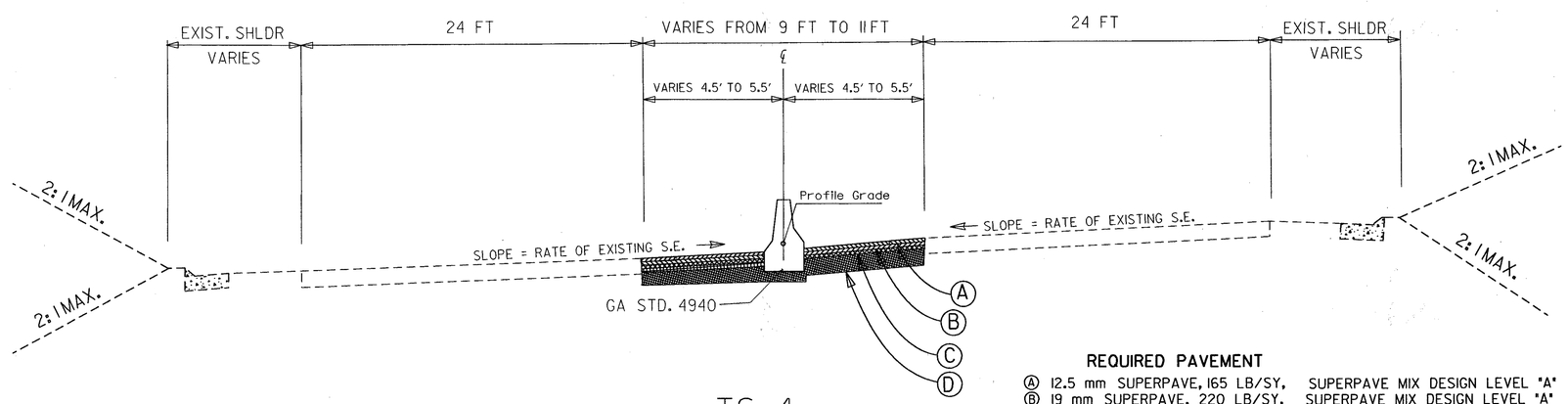

TS-4
SUPERELEVATION SECTION

REQUIRED PAVEMENT

Ⓐ 12.5 mm SUPERPAVE, 165 LB/SY, SUPERPAVE MIX DESIGN LEVEL "A"
Ⓑ 19 mm SUPERPAVE, 220 LB/SY, SUPERPAVE MIX DESIGN LEVEL "A"
Ⓒ 25 mm SUPERPAVE, 440 LB/SY, SUPERPAVE MIX DESIGN LEVEL "A"
Ⓓ GRADED AGGREGATE BASE, 12 INCH INCLUDING MATL

NOT TO SCALE	MEDIAN IMPROVEMENT STATE ROUTE 166/LANGFORD PARKWAY	TYPICAL SECTIONS	SHEET NO. 2 OF 2