STATE	PROJECT NUMBER	SHEET NO.	TOTAL SHEETS
GA.	STP-M001-00 (350)	8	8

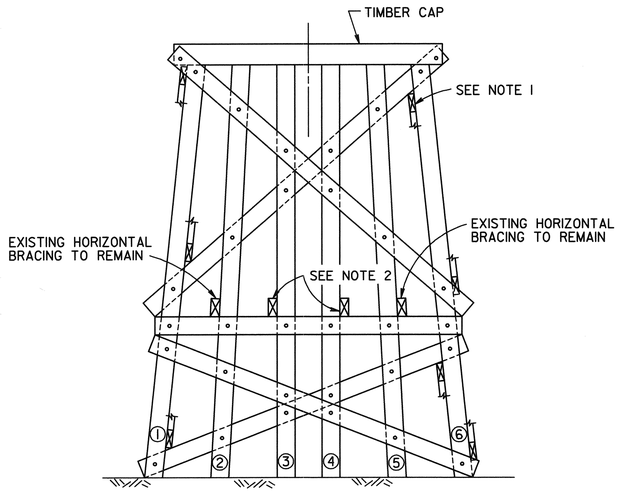

② DENOTES PILE NUMBER

ELEVATION - BENT 10

(LOOKING EAST)

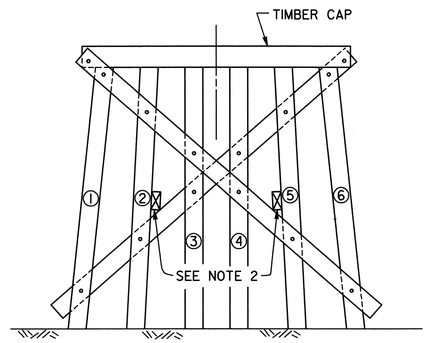

② DENOTES PILE NUMBER

ELEVATION - BENT 14

(LOOKING WEST)

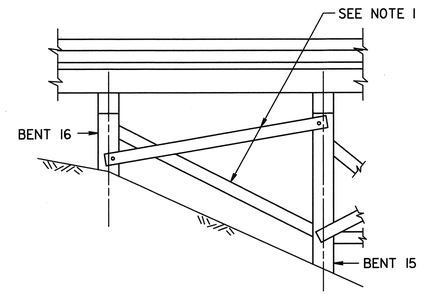

⚠ ELEVATION - SPAN 15

(LOOKING NORTH)

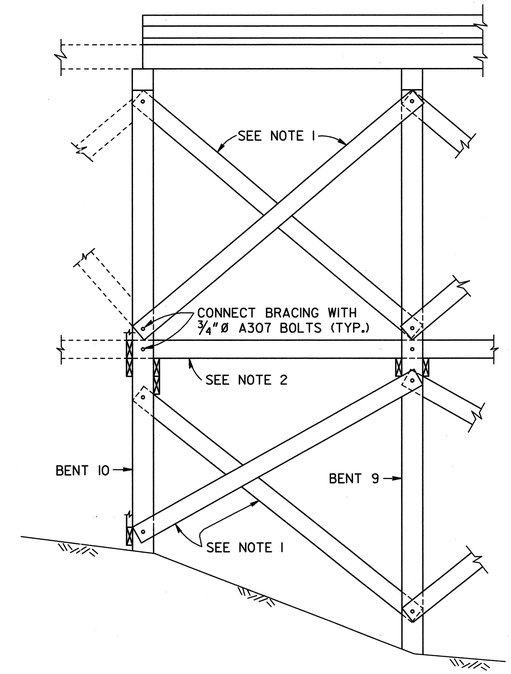

ELEVATION - SPAN 9

(LOOKING NORTH)

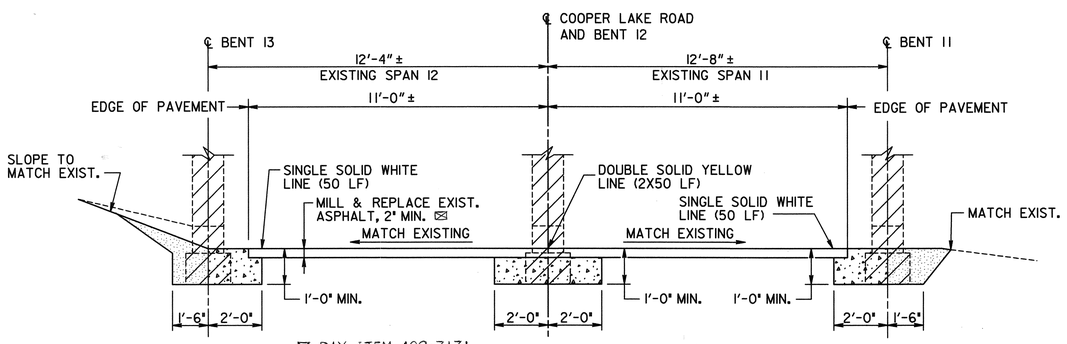

⊠ PAY ITEM 402-3131

LEGEND

- EXISTING STRUCTURE TO BE REMOVED
- CLASS B CONCRETE BELOW ASPHALT
- BACKFILL AS REQUIRED

NOTES :

1. PROVIDE CLASS B CONCRETE IN AREAS WHERE EXISTING TIMBER SUPPORT IS REMOVED.
2. MILL AND REPLACE ASPHALT 25'-0" MIN. ON EITHER SIDE OF THE CENTERLINE OF SILVER COMET TRAIL. EXISTING FOOTING CONCRETE CAN REMAIN BELOW NEW ASPHALT AS REQUIRED.
3. BACKFILL EXCAVATED AREAS ADJACENT TO BENTS 11 AND 13. GRADE TO MATCH EXISTING SLOPES.
4. COST OF EXCAVATION, BACKFILL, AND REGRADING SHALL BE INCLUDED IN THE LUMP SUM PRICE BID FOR GRADING COMPLETE.

COOPER LAKE ROAD RECONSTRUCTION DETAIL

⚠ NOTES :

1. USE CROSS BRACING REMOVED FROM SPANS 10, 11, 12 & 13 TO BRACE EACH SIDE OF OUTSIDE PILES SUPPORTING SPANS 9 , 14, AND 15.
2. USE HORIZONTAL BRACING REMOVED FROM SPANS 10, 11, 12 & 13 TO BRACE INTERIOR PILES AS SHOWN.
3. COST OF CONNECTION BOLTS SHALL BE INCLUDED IN THE OVERALL BID SUBMITTED. CONNECTION BOLT SIZE SHALL MATCH EXISTING.

BRIDGE NO. 1

JBT J.B. Trimble, Inc.
6445 Powers Ferry Road
Atlanta GA 30339-2933
(770) 952-1022

GEORGIA
DEPARTMENT OF TRANSPORTATION
OPERATIONS DIVISION-OFFICE OF MAINTENANCE

BRIDGE REHABILITATION
SILVER COMET TRAIL OVER COOPER LAKE ROAD
SUBSTRUCTURE DETAILS
COBB COUNTY STP-M001-00 (350)

BY	REVISIONS	DATE
GLE	DETAILS REVISED	10-10-02

GEORGIA REGISTERED No. 16685 PROFESSIONAL ENGINEER SAMUEL L. POWELL JR.
10-10-02

BRIDGE SHEET 5 OF 5

SCALE: AS SHOWN MAY 2002

DESIGNED MDT CHECKED GLE REVIEWED BKS
DRAWN JWG DESIGN GROUP MAINTENANCE APPROVED EHG

C:\DGN\ 2019\CTI1\BOL11 BT.DGN 10-14-02 ITD