STATE	PROJECT NUMBER	SHEET NO.	TOTAL SHEETS
GA.	STP-M001-00 (350)	7	8

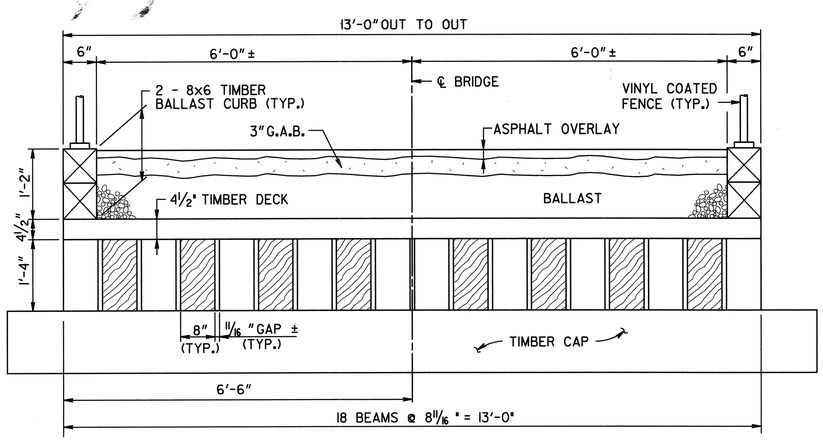

EXISTING SECTION

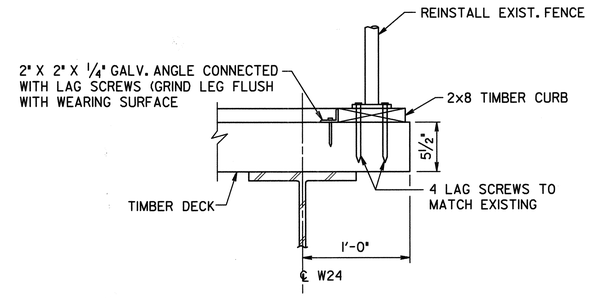

⚠ FENCE DETAIL

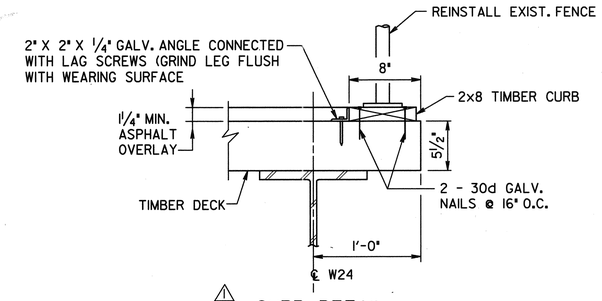

⚠ CURB DETAIL

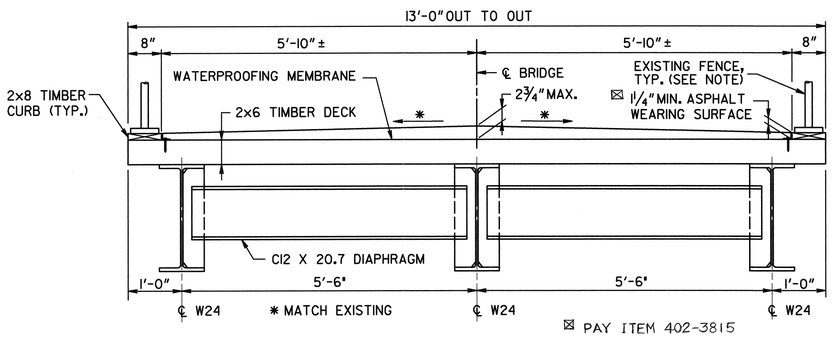

PROPOSED SECTION

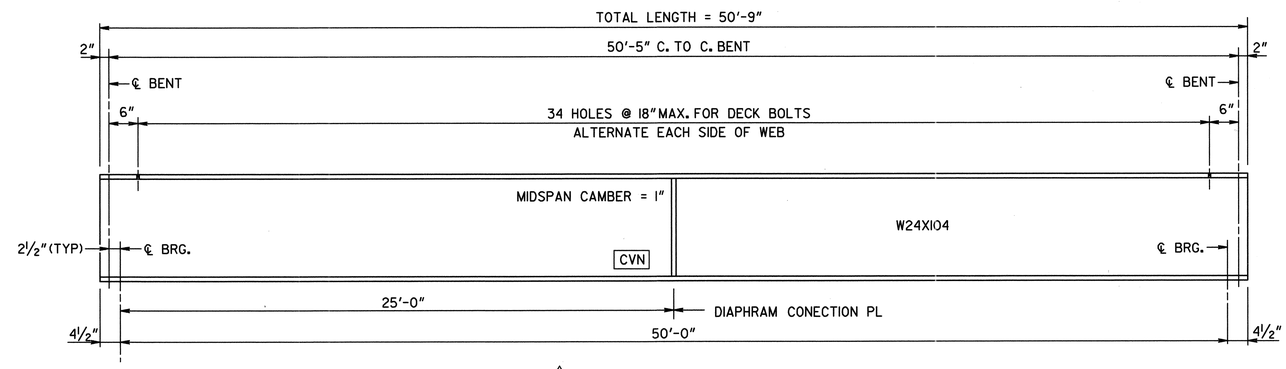

⚠ BEAM ELEVATION

NOTE :
EXISTING CHAIN LINK FENCE SHALL BE REMOVED AND REINSTALLED ON THE REPLACEMENT SPAN. THE COST OF THIS WORK SHALL BE INCLUDED IN THE OVERALL BID SUBMITTED.

NOTES:

1. ALL ROLLED BEAMS, GUSSET PLATES AND CHANNELS ASTM SHALL BE A709 GR. 50W.
2. ALL DECK FASTENERS SHALL BE A307 HOT DIPPED GALVANIZED LAG BOLTS.
3. THE CAMBER INCLUDES THE DEAD LOAD DEFLECTIONS AND VERTICAL CURVE CORRECTION.

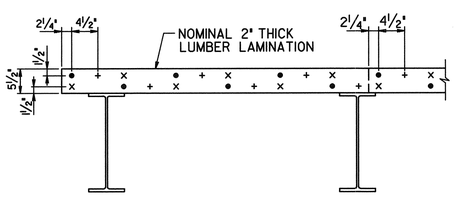

• INDICATES NAIL IN 1st LAMINATION
× INDICATES NAIL IN 2nd LAMINATION
+ INDICATES NAIL IN 3rd LAMINATION

NOTE:
NAILS SHALL BE MINIMUM 4½" LONG, 30d COMMON WIRE GALVANIZED SPIKES.

⚠ NAIL PLACEMENT PATTERN

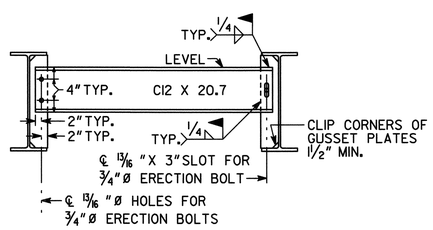

DIAPHRAGM DETAILS

NOTE: WELD DIAPHRAGMS AFTER ASPHALT IS PLACED.

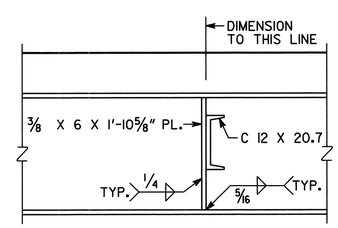

SECTION THRU DIAPHRAGM

BRIDGE NO. 1

JBT
J.B. Trimble, Inc.
6445 Powers Ferry Road
Atlanta GA 30339-2933
(770) 952-1022

GEORGIA
DEPARTMENT OF TRANSPORTATION
OPERATIONS DIVISION-OFFICE OF MAINTENANCE

BRIDGE REHABILITATION
SILVER COMET TRAIL OVER COOPER LAKE ROAD
DECK SECTION AND DETAILS
COBB COUNTY STP-M001-00 (350)

BY	REVISIONS	DATE
GLE	DETAILS REVISED/ADDED	10-10-02

GEORGIA REGISTERED No. 16685 PROFESSIONAL ENGINEER SAMUEL L. POWELL
10-10-02

BRIDGE SHEET 4 OF 5

SCALE: AS SHOWN MAY 2002

DESIGNED MDT CHECKED GLE REVIEWED BKS
DRAWN JWG DESIGN GROUP MAINTENANCE APPROVED EHG