STATE	PROJECT NUMBER	SHEET NO.	TOTAL SHEETS
GA.	STP-M001-00 (350)	6	8

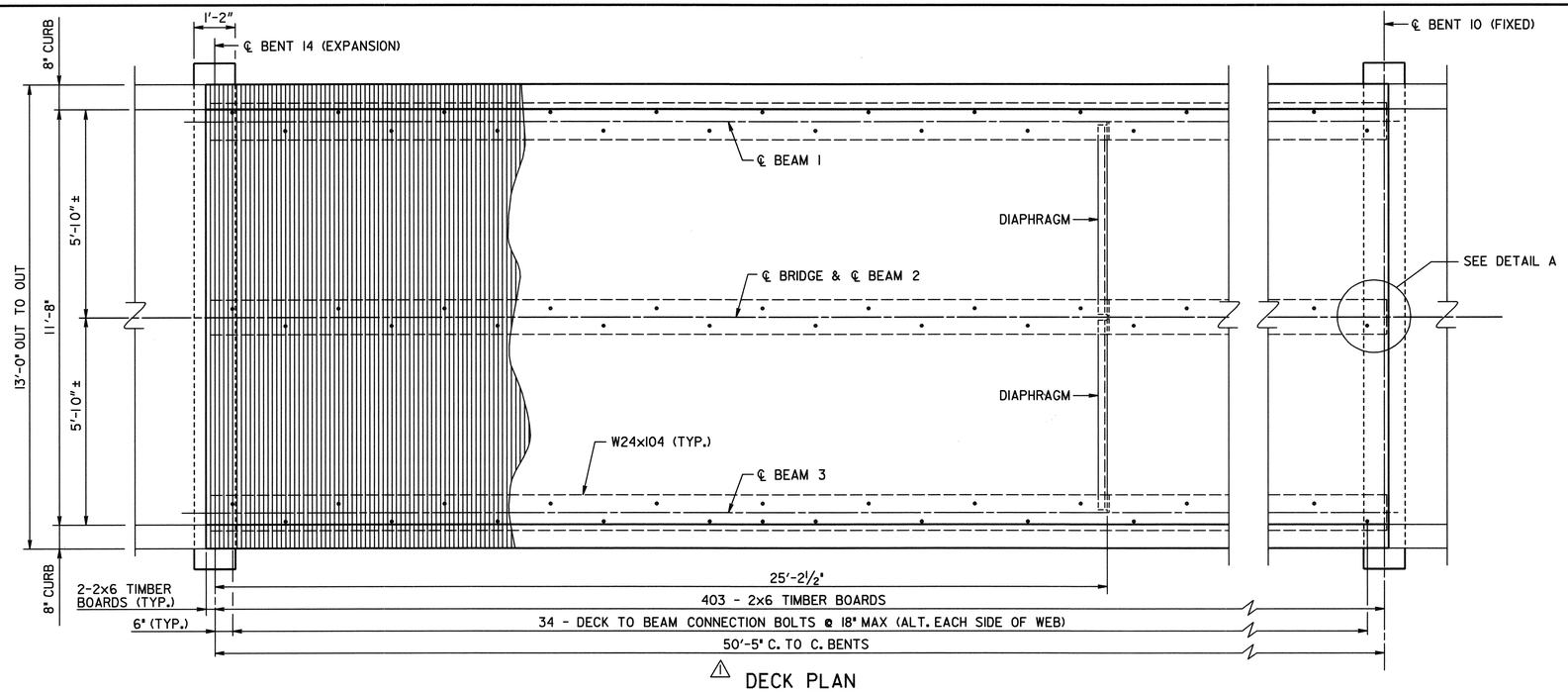

⚠1 DECK PLAN

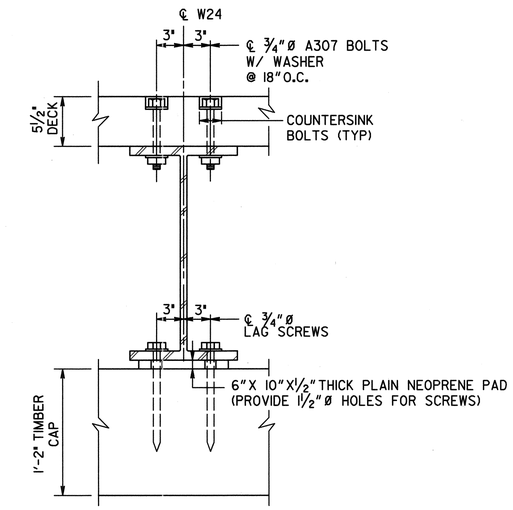

⚠1 DECK CONNECTION

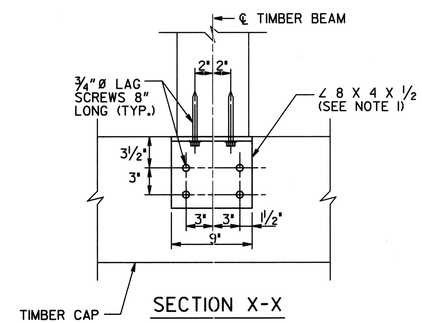

SECTION X-X

NOTE :

1. INSTALL ANGLE PRIOR TO REMOVING TIMBER BEAMS IN SPANS 10, 11, 12 AND 13.
2. PROVIDE ⅞"Ø HOLES IN BEAM FLANGE AT FIXED END AND ⅞" X 1½" LONG SLOTTED HOLES AT EXPANSION END.

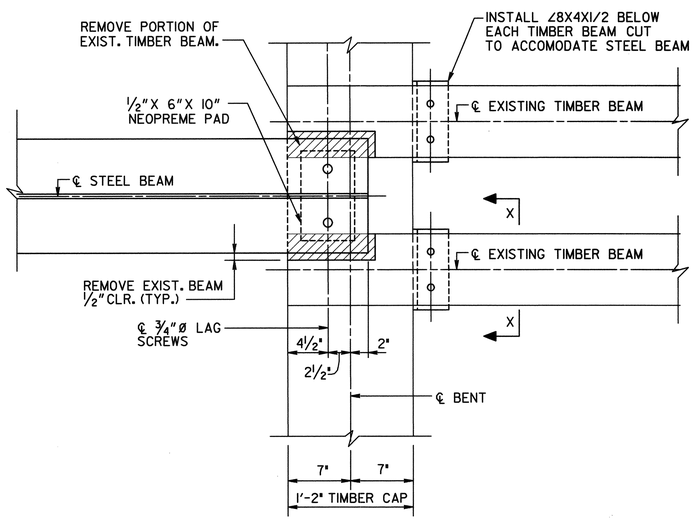

⚠1 DETAIL A

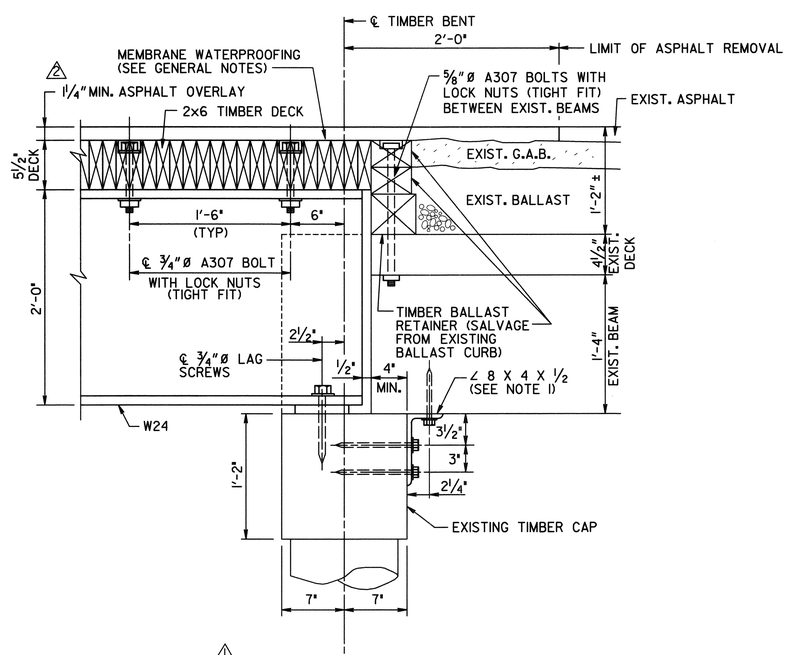

⚠1 SECTION AT BENT

BRIDGE NO. 1

JBT
J.B. Trimble, Inc.
6445 Powers Ferry Road
Atlanta GA 30339-2933
(770) 952-1022

GEORGIA
DEPARTMENT OF TRANSPORTATION
OPERATIONS DIVISION-OFFICE OF MAINTENANCE

BY	REVISIONS	DATE
GLE	DETAILS REVISED	10-10-02
GLE	DEPTH REVISED	11-13-02

GEORGIA REGISTERED No. 18685 PROFESSIONAL ENGINEER SAMUEL L. POWELL JR.
11-13-02

BRIDGE REHABILITATION
SILVER COMET TRAIL OVER COOPER LAKE ROAD
DECK PLAN

COBB COUNTY — STP-M001-00 (350)

SCALE: AS SHOWN — MAY 2002

BRIDGE SHEET 3 OF 5

DESIGNED MDT — CHECKED GLE — REVIEWED BKS
DRAWN JWG — DESIGN GROUP MAINTENANCE — APPROVED EHG

C:\DGN\ 2019\CTI\BOLI1 DK.DGN 10-14-02 ITD