STATE	PROJECT NUMBER	SHEET NO.	TOTAL SHEETS
GA.	NHS-M.001-00(167)	19	26

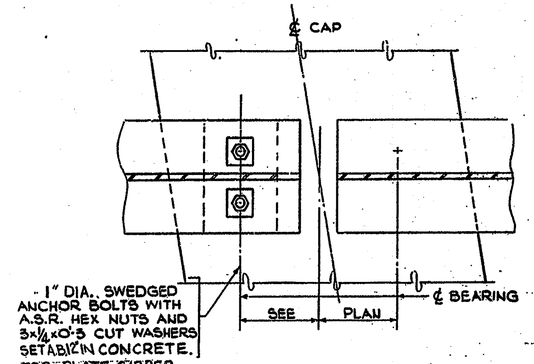

PLAN - INTERMEDIATE BENT

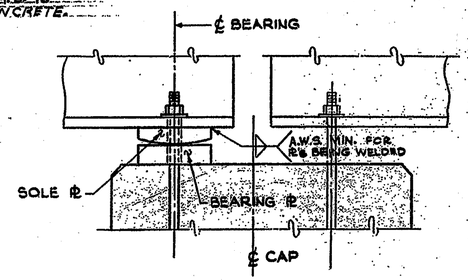

ELEVATION - INTERMEDIATE BENT

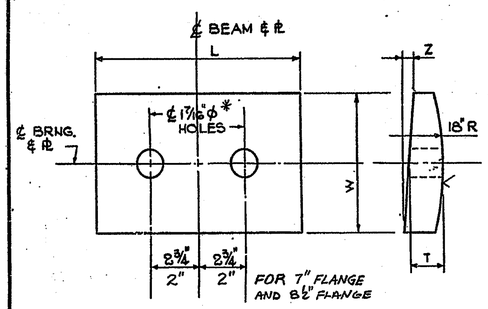

SOLE PLATE

* 1 7/16" Φ HOLE FOR 1 1/4" Φ A.B.

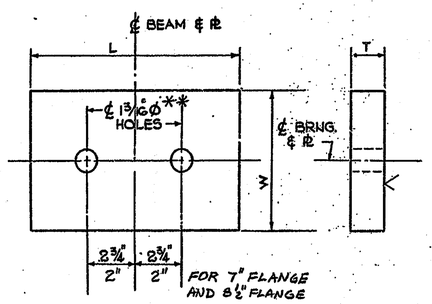

BEARING PLATE

** 1 7/16" Φ HOLE FOR 1 1/4" Φ A.B.

FIXED ASSEMBLY

DETAIL 3-1

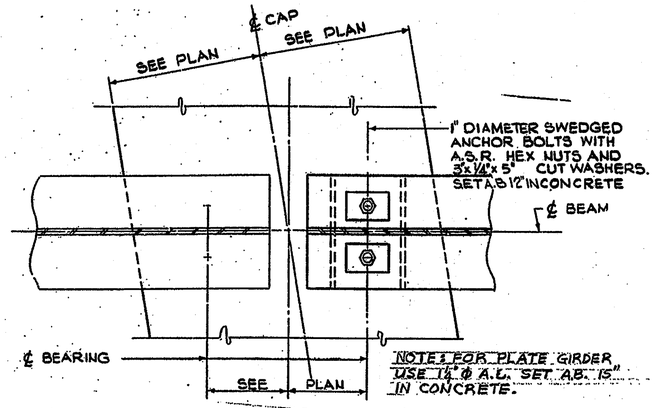

PLAN - INTERMEDIATE BENT

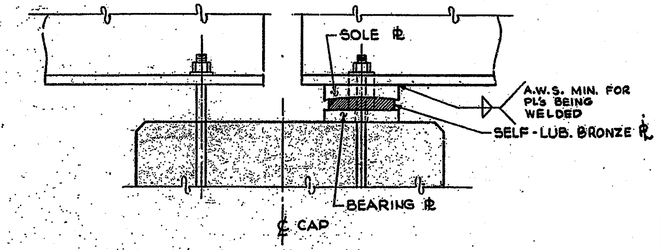

ELEVATION - INTERMEDIATE BENT

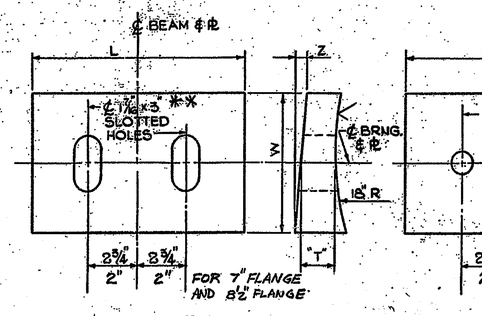

SOLE PLATE

** 1 7/16" x 3" SLOTTED HOLES FOR 1 1/4" Φ A.B.

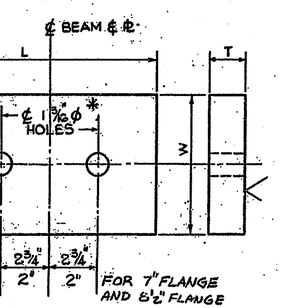

BEARING PLATE

* 1 7/16" Φ HOLES FOR 1 1/4" Φ A.B.

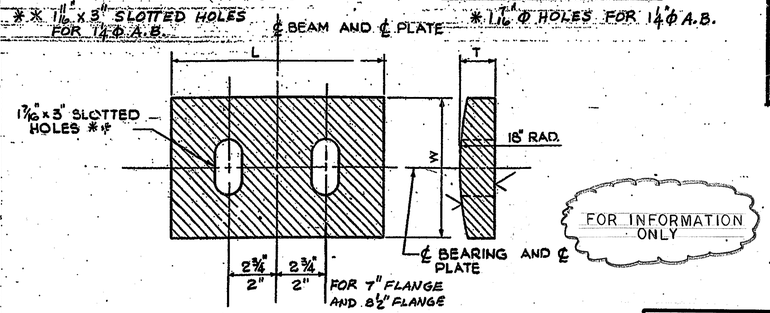

SELF-LUBRICATING BRONZE PLATE

EXPANSION ASSEMBLY

DETAIL 3-2

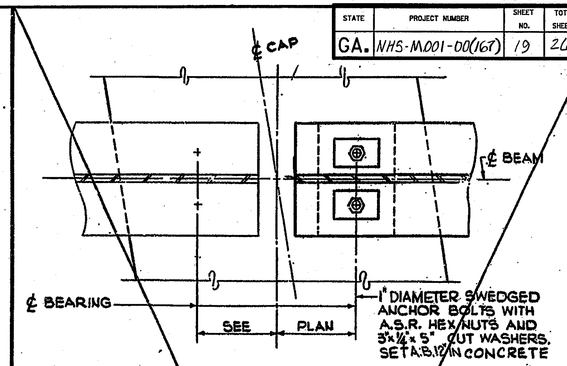

PLAN - INTERMEDIATE BENT

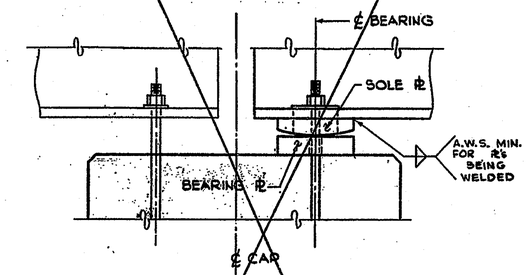

ELEVATION - INTERMEDIATE BENT

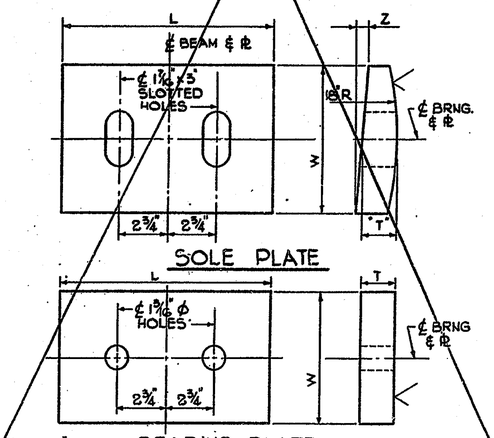

SOLE PLATE

BEARING PLATE

EXPANSION ASSEMBLY

DETAIL 3-3

BEARING ASSEMBLY NOTES

1. FINISH IN ACCORDANCE WITH A.N.S.I. B46.1 PART 1 AS FOLLOWS: FIXED SOLE AND BEARING PLATES, A.N.S.I. 250 EXPANSION SOLE AND BEARING PLATES, A.N.S.I. 125.
2. ALL MACHINED STEEL BEARING SURFACES SHALL BE SHOP COATED WITH WHITE LEAD AND TALLOW IN ACCORDANCE WITH ARTICLE 501.03 OF THE STANDARD SPECIFICATIONS, THOSE SURFACES IN CONTACT WITH SELF-LUBRICATING BRONZE PLATES SHALL BE FIELD CLEANED AND COATED WITH LIQUID OR STICK LUBRICANT FURNISHED BY SELF-LUBRICATING BRONZE PLATE MANUFACTURER.
3. VARIABLE DIMENSIONS L, W, T & Z SHOWN ON BEARING ASSEMBLY LAYOUTS.
4. ALL SOLE AND BEARING PLATES SHALL BE A-36 STEEL.
5. SELF-LUBRICATING PLATES SHALL BE CAST BRONZE A.A.S.H.O. M107 (A.S.T.M. B-22) ALLOY B.
6. THESE DETAILS ARE APPLICABLE ONLY WHERE CALLED FOR.

FOR INFORMATION ONLY

BRIDGE SHEET 15 OF 20

SIMECO JOB NO. 73 / 1123

BRIDGE SHEET 3 OF 6

DATE	REVISIONS	BY

SIMONS · EASTERN COMPANY
ATLANTA, GEORGIA

GEORGIA
DEPARTMENT OF TRANSPORTATION
HIGHWAY DIVISION - BRIDGE DESIGN

DETAIL SHEET 3

BRIDGE NOS. 4, 5, 24L & 25R

FULTON COUNTY I-FI-285-1(84)88 CT. 3

SCALE: NONE DATE: JAN., 1974

DESIGNED LRH TRACED REVIEWED
DRAWN FCN CHECKED RSF APPROVED