STATE	PROJECT NUMBER	SHEET NO.	TOTAL SHEETS
GA.	NHS-M001-00(167)	18	26

$\theta_1 = 59°14'06''$
$\theta_2 = 59°12'57''$
$\theta_3 = 59°11'47''$
$\theta_4 = 59°10'37''$
$\theta_5 = 59°10'08''$
$\theta_6 = 59°08'52''$
$\theta_7 = 59°07'42''$
$\theta_8 = 59°06'32''$

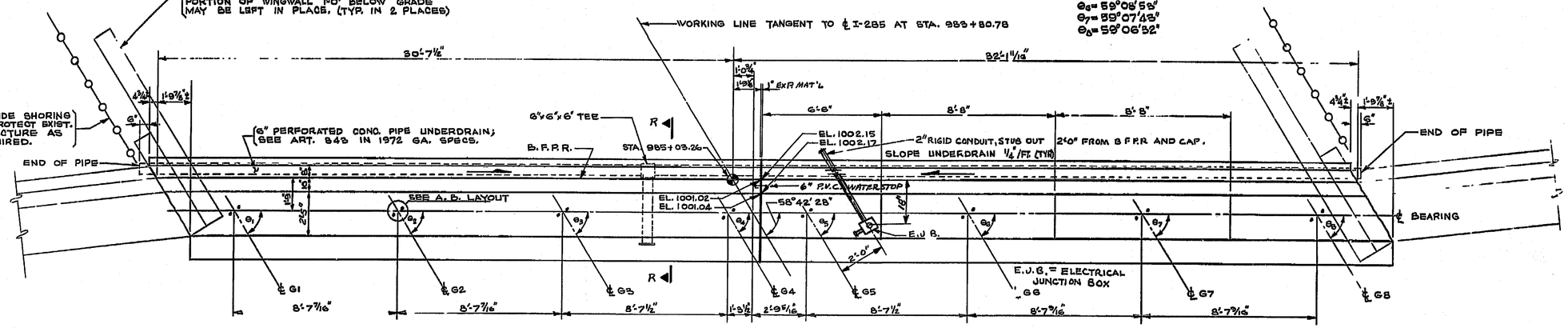

PLAN OF END BENT 4 (LOOKING AHEAD)

SCALE: 1"=3'-0"

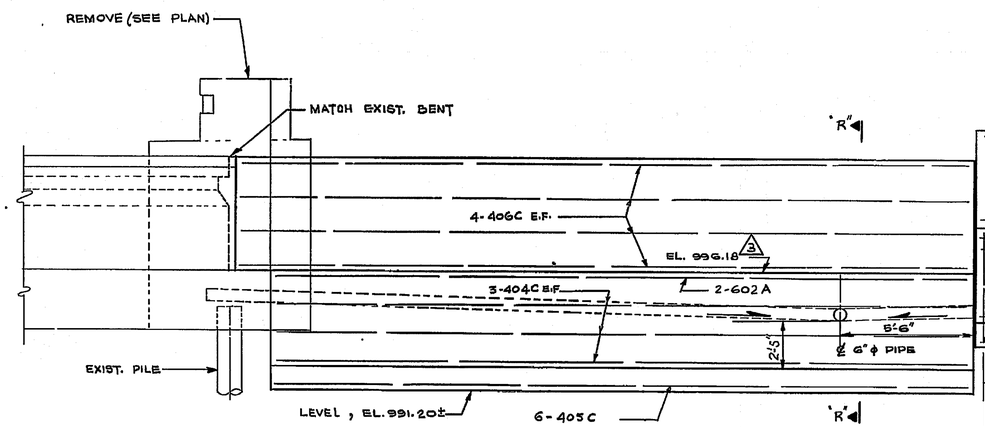

ELEVATION

SCALE: 1"=3'-0"

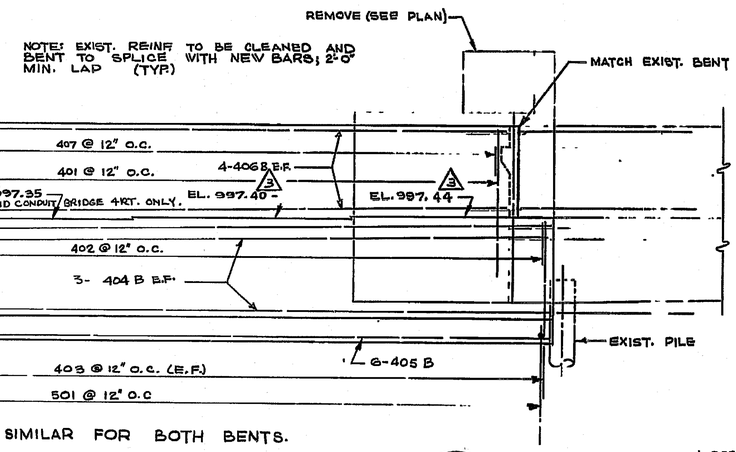

NOTE: REINF. SIMILAR FOR BOTH BENTS.

NOTES

1. DESIGN SOIL BEARING PRESSURE IS 2 TONS/SQ. FT.
2. FOR ADDITIONAL DETAILS, SEE SHEET NO. 1.

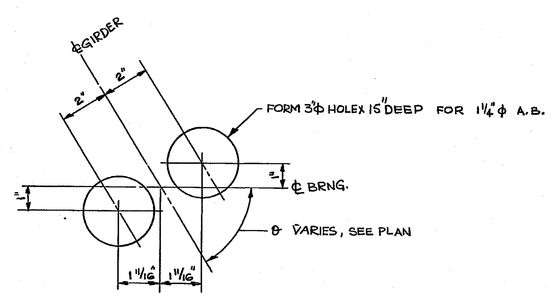

ANCHOR BOLT LAYOUT

SCALE: 1"=0'-3"

FOR INFORMATION ONLY

TABLE OF QUANTITIES	BENT 4*	
	5	4
CU. YDS. CLASS "A" CONCRETE	26.9	26.8
LBS. BAR REINFORCEMENT STEEL	1319	1319

* THERE IS ONLY ONE BT. 4. IT HAS BEEN DIVIDED BETWEEN BR. 5 & BR. 4 FOR QUANTITY CALCULATIONS ONLY.

NOTE: COST OF DRAIN PIPE, SAND BLANKET AND WATER STOPS, INCLUDING LABOR TO INSTALL SHALL BE INCLUDED IN PRICE BID FOR CONTRACT ITEMS. TYP. BENT 4 & 1

BRIDGE NO. 4 & 5

SIMONS · EASTERN COMPANY
ATLANTA, GEORGIA

GEORGIA
DEPARTMENT OF TRANSPORTATION
HIGHWAY DIVISION-BRIDGE DESIGN

END BENT DETAILS-SHEET NO. 2
I-285 OVER S.R. 400
FULTON COUNTY — I-FI-285-1(84)88 CT3
SCALE: AS SHOWN — DATE: JAN., 1974

BY	No.	REVISIONS	DATE
HUL	-	CHANGED ELEV.'S	1-16-75

BRIDGE SHEET 14 OF 20
FILE 0203
SIMECO JOB NO. 73 / 1123
BRIDGE SHEET 11 OF 13

DESIGNED VP
DRAWN RFR
TRACED
CHECKED RSF
REVIEWED
APPROVED