STATE	PROJECT NUMBER	SHEET NO.	TOTAL SHEETS
GA.	NHS-1001-00(167)	17	26

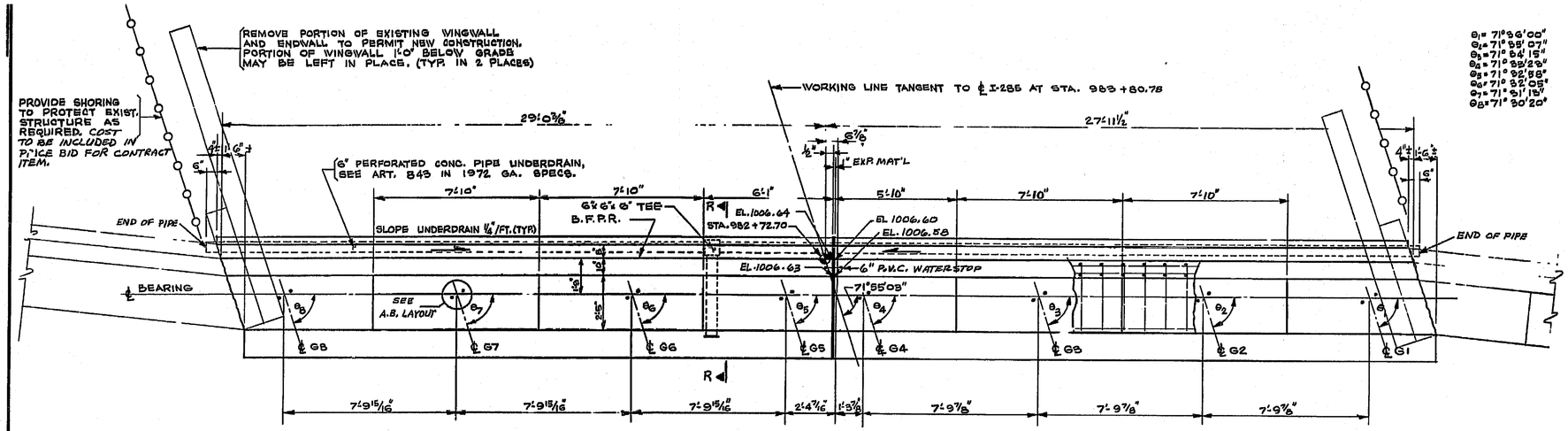

PLAN OF END BENT 1 (LOOKING BACKWARDS)

SCALE: 1"=3'-0"

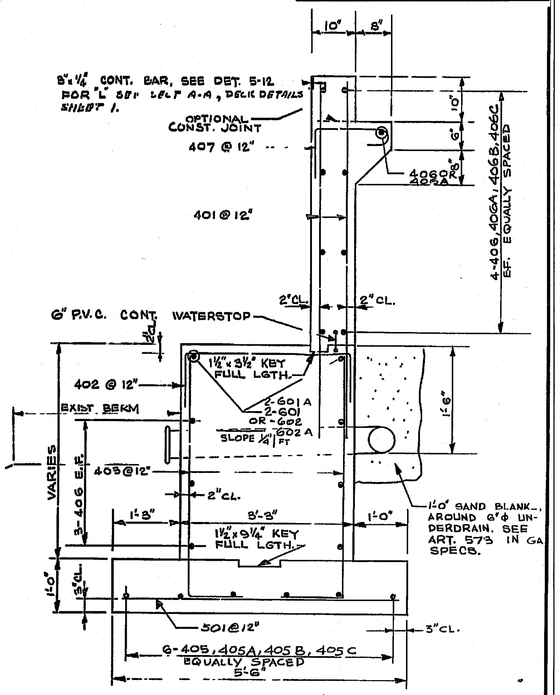

SECTION-R R

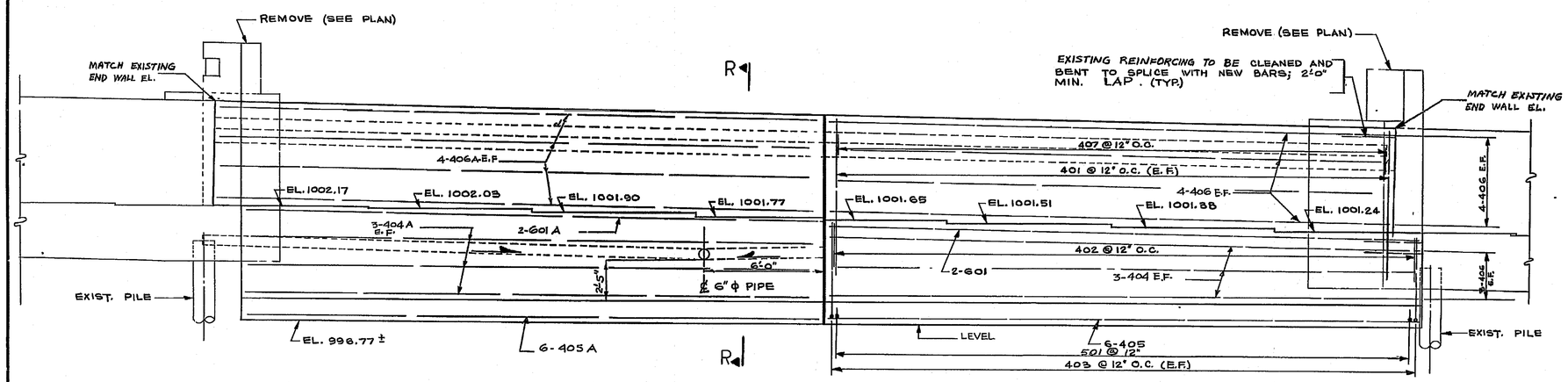

ELEVATION

SCALE: 1"=3'-0"

NOTE- REINF. SIMILAR FOR BOTH BENTS.

TABLE OF QUANTITIES		
ITEM \ BENT	BENT-1*	
	5	4
CU. YDS. CLASS "A" CONCRETE	23.2	25.1
LBS. BAR REINFORCEMENT STEEL	1199	1199

*THERE IS ONLY ONE BT. 1, IT HAS BEEN DIVIDED BETWEEN BRIDGE 5 AND BRIDGE 4 FOR QUANTITY CALCULATIONS ONLY.

NOTES

1. DESIGN SOIL PRESSURE IS 2 TONS/SQ. FT.

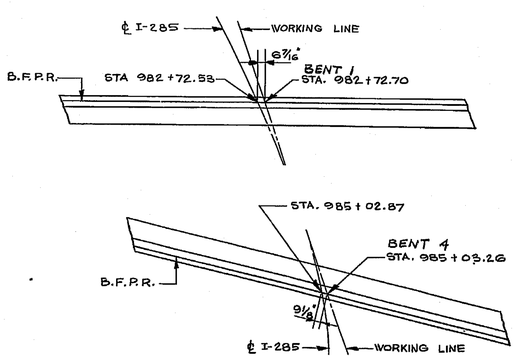

PLAN OF END BENTS

NO SCALE

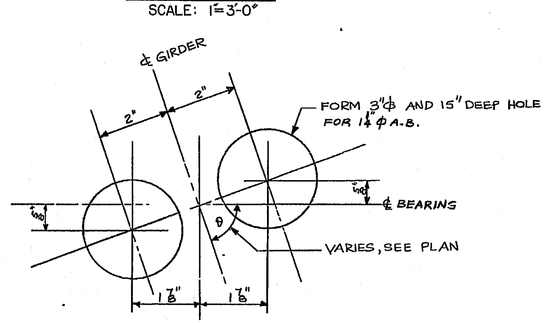

ANCHOR BOLT LAYOUT

FOR INFORMATION ONLY

BRIDGE NO. 4 & 5

SIMONS · EASTERN COMPANY
ATLANTA, GEORGIA

GEORGIA
DEPARTMENT OF TRANSPORTATION
HIGHWAY DIVISION-BRIDGE DESIGN

END BENT DETAILS SHEET NO. 1
I-285 OVER S.R. 400

FULTON COUNTY — I-FI-285-1(84)88 CT3
SCALE: AS SHOWN — DATE: JAN., 1974

BRIDGE SHEET 13 OF 20
FILE 0203
SIMECO JOB NO. 73 / 1123
BRIDGE SHEET 10 OF 13

NO. | REVISIONS | BY | DATE

DESIGNED VP | TRACED | REVIEWED
DRAWN RFR | CHECKED RSF & V.P. | APPROVED