STATE	PROJECT NUMBER	SHEET NO.	TOTAL SHEETS
GA.	NHS-M001-00(162)	15	26

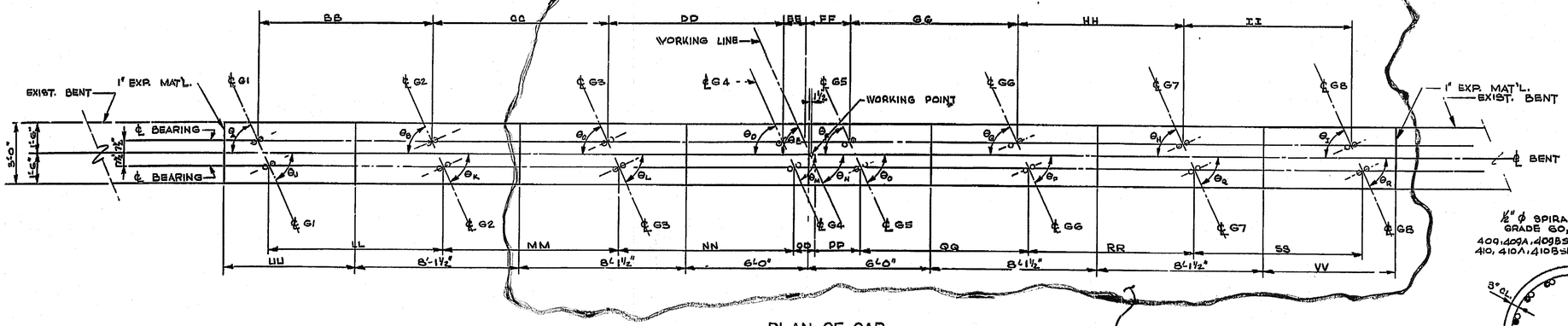

PLAN OF CAP

SCALE: 1"=3'-0"

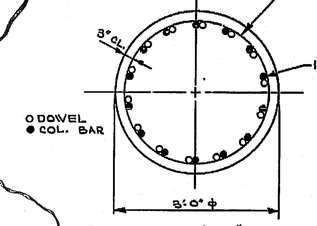

SECT. "J-J"

SCALE: 3"=4'-0"

O DOWEL
● COL. BAR

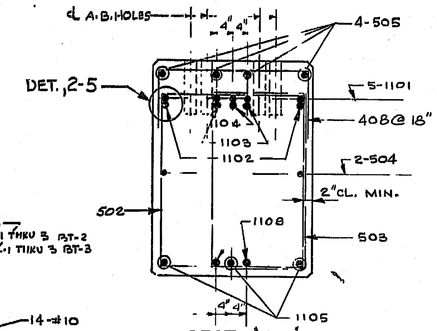

SECT. "K-K"

SCALE: 3"=4'-0"

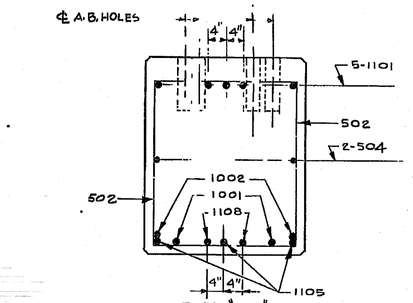

SECT. "L-L"

SCALE: 3"=4'-0"

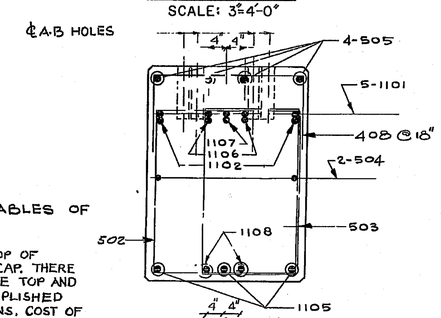

SECT. "M-M"

SCALE: 3"=4'-0"

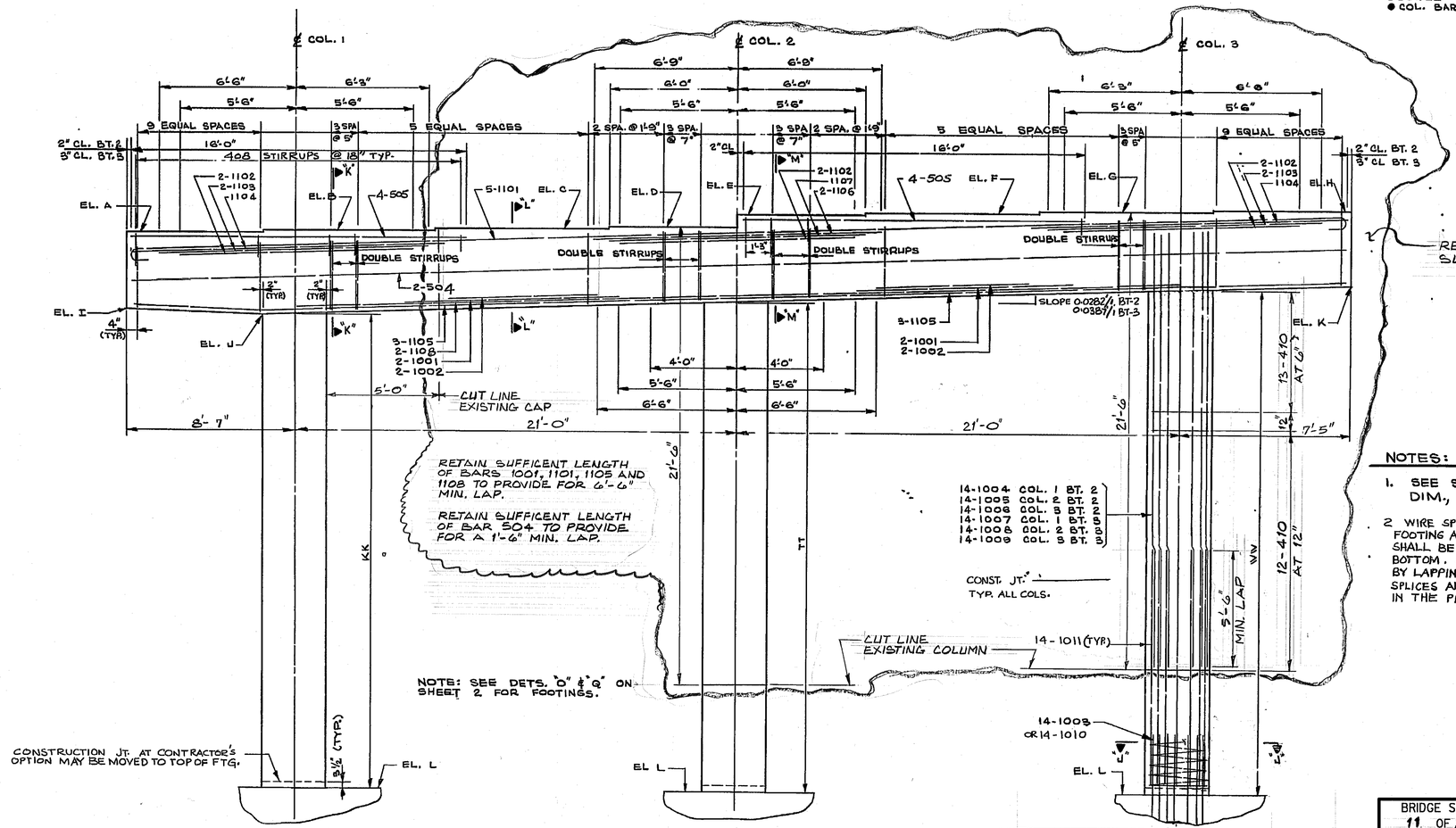

ELEVATION OF BENT 3 LOOKING AHEAD

SCALE: 1"=3'-0"

QUANTITIES	
ITEM	BENT 3
CY CLASS 'AA' CONCRETE	28.0
LBS BAR REINF. STEEL	6862

NOTES:

1. SEE SHEET NO. 2 FOR TABLES OF DIM., ELEV, & ANGLES.
2. WIRE SPIRALS SHALL BEGIN AT TOP OF FOOTING AND END AT BOTTOM OF CAP. THERE SHALL BE 1½ FLAT TURNS AT THE TOP AND BOTTOM. SPLICES MAY BE ACCOMPLISHED BY LAPPING AND WELDING 1½ TURNS. COST OF SPLICES AND SPACERS SHALL BE INCLUDED IN THE PRICE BID FOR BAR REINF. STEEL.

BRIDGE NO. 4 & 5

SIMONS · EASTERN COMPANY
ATLANTA, GEORGIA

GEORGIA
DEPARTMENT OF TRANSPORTATION
HIGHWAY DIVISION-BRIDGE DESIGN

INTERMEDIATE BENT DETAILS-SHEET NO. 1
I-285 OVER S.R. 400
FULTON COUNTY I-FI-285-1(84)88 073
SCALE: AS SHOWN DATE: JAN., 1974

BRIDGE SHEET 11 OF 20
FILE 0203
SIMECO JOB NO 73 / 1123
BRIDGE SHEET 8 OF 13

DATE | REVISIONS | No. | BY

DESIGNED VP
DRAWN RFR
TRACED
CHECKED RSF & V.B
REVIEWED
APPROVED