STATE	PROJECT NUMBER	SHEET NO.	TOTAL SHEETS
GA.	NHS-M001-00(167)	14	26

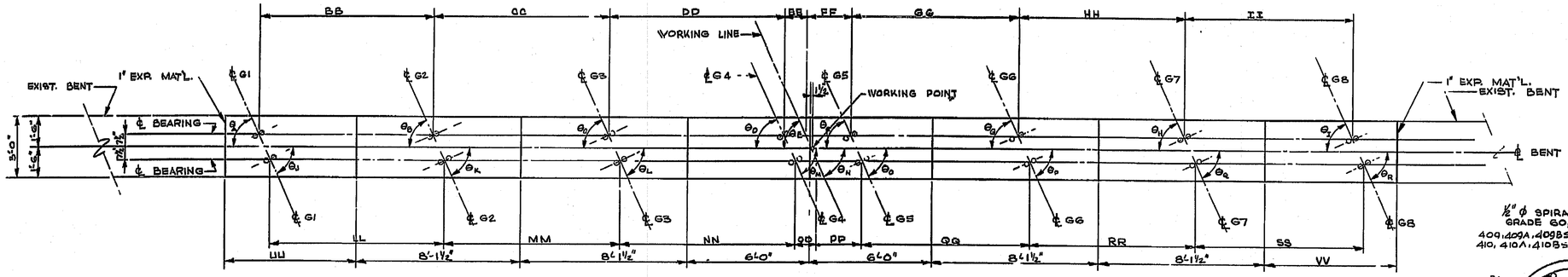

PLAN OF CAP
SCALE: 1"=3'-0"

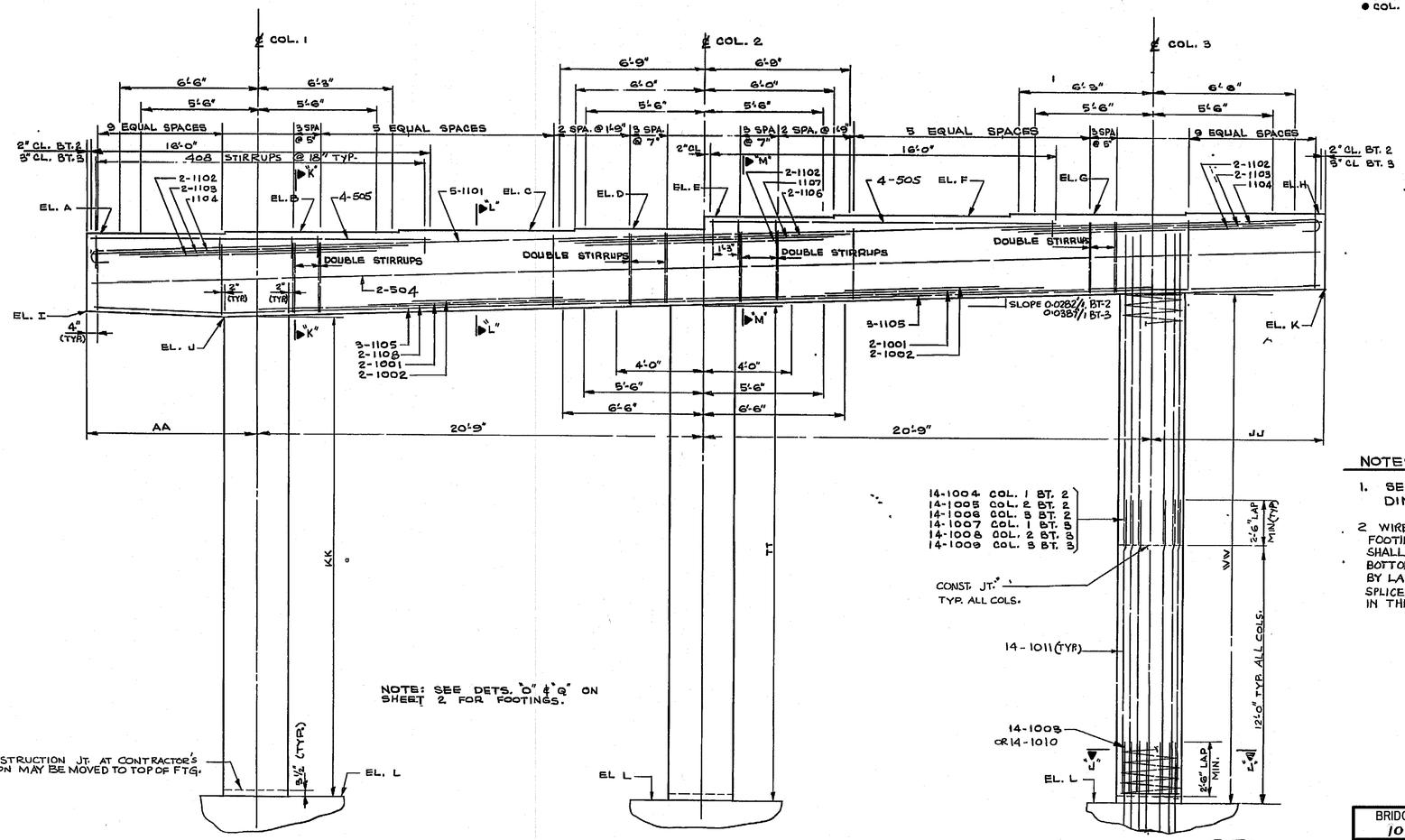

NOTE: SEE DETS. "O" & "Q" ON SHEET 2 FOR FOOTINGS.

ELEVATION OF BENT 2 LOOKING AHEAD
SCALE: 1"=3'-0"

FOR INFORMATION ONLY

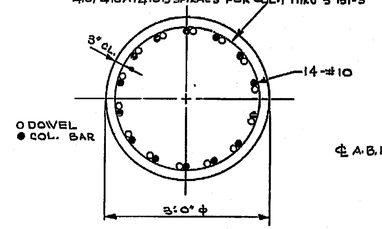

SECT. "J-J"
SCALE: 3"=4'-0"

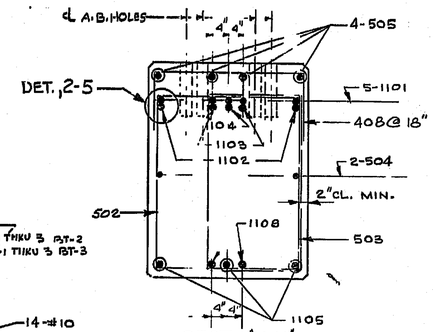

SECT. "K-K"
SCALE: 3"=4'-0"

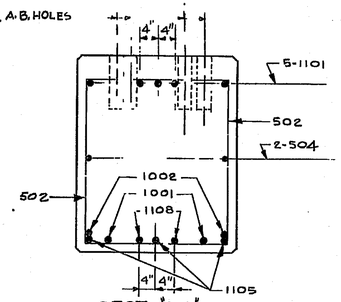

SECT. "L-L"
SCALE: 3"=4'-0"

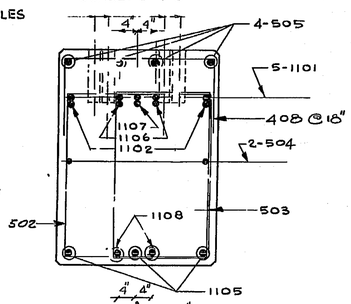

SECT. "M-M"
SCALE: 3"=4'-0"

NOTES:

1. SEE SHEET NO. 2 FOR TABLES OF DIM., ELEV, & ANGLES.
2. WIRE SPIRALS SHALL BEGIN AT TOP OF FOOTING AND END AT BOTTOM OF CAP. THERE SHALL BE 1½ FLAT TURNS AT THE TOP AND BOTTOM. SPLICES MAY BE ACCOMPLISHED BY LAPPING AND WELDING 1½ TURNS. COST OF SPLICES AND SPACERS SHALL BE INCLUDED IN THE PRICE BID FOR BAR REINF STEEL.

BRIDGE NO. 4 & 5

SIMONS · EASTERN COMPANY
ATLANTA, GEORGIA

GEORGIA
DEPARTMENT OF TRANSPORTATION
HIGHWAY DIVISION-BRIDGE DESIGN

INTERMEDIATE BENT DETAILS - SHEET NO. 1
I-285 OVER S.R. 400
FULTON COUNTY I-FI-285-1(84)88 C73
SCALE: AS SHOWN DATE: JAN., 1974

BY	No.	REVISIONS	DATE

BRIDGE SHEET 10 OF 20
FILE 0203
SIMECO JOB NO 73 / 1123
BRIDGE SHEET 8 OF 13

DESIGNED VP
DRAWN RFR
TRACED
CHECKED RSF & V.B
REVIEWED
APPROVED