STATE	PROJECT NUMBER	SHEET NO.	TOTAL SHEETS
GA.	NHS-M001-00(167)	11	26

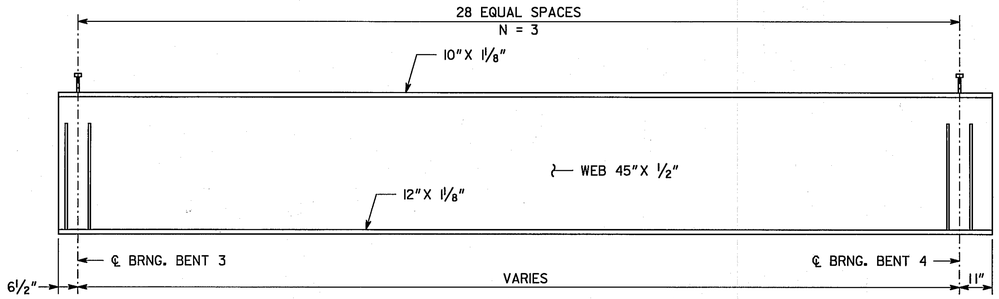

GIRDERS G4 - SPAN 3 LT. BRIDGE

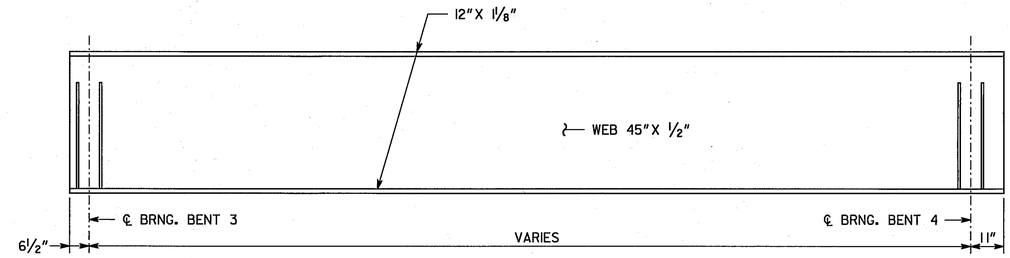

GIRDERS G5, G6, G7 - SPAN 3 RT. BRIDGE

NOTE : SEE BRIDGE SHEET 6 OF 20 FOR DIMENSIONS NOT SHOWN AND BEARING STIFFENER DETAILS. NO TRANSVERSE STIFFENERS REQUIRED.

DEAD LOAD DEFLECTION AT MIDSPAN GIRDERS G4, G5, G6, G7 SPAN 3	
GIRDER	1/16"
SLAB, COPING, DIAPHRAGMS	3/8"
BARRIER	1/8"
TOTAL	9/16"

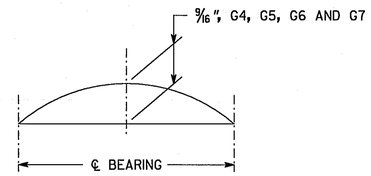

CAMBER DIAGRAM GIRDERS G4, G5, G6, G7 SPAN 3

CAMBER INCLUDES DEAD LOAD DEFLECTION DUE TO GIRDER, SLAB, DIAPHRAGM AND BARRIER

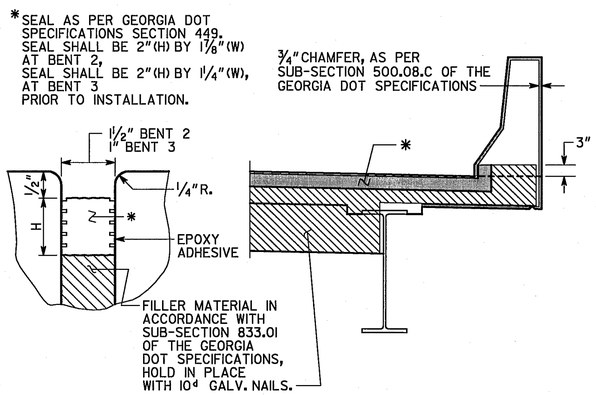

EXPANSION JOINT DETAILS

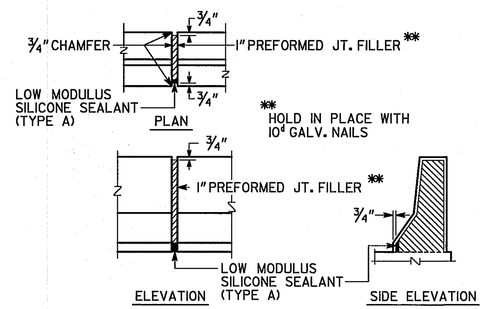

DETAILS OF 1" EXPANSION JOINT IN BARRIER

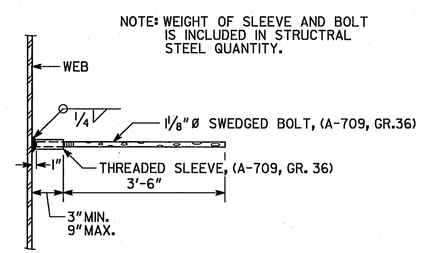

EDGE BEAM BAR LAP DETAIL

BRIDGE NO. 4 AND 5

GEORGIA
DEPARTMENT OF TRANSPORTATION
PRECONSTRUCTION DIVISION-OFFICE OF BRIDGE DESIGN

STRUCTURAL STEEL DETAILS
MISCELLANEOUS DETAILS
I-285 OVER GA 400
FULTON COUNTY NHS-M001-00(167)

NO SCALE JUNE 2001

BY	REVISIONS	DATE

BRIDGE SHEET 7 OF 20

DESIGNED WEI | CHECKED PVL | REVIEWED JPT/MCD
DRAWN DM | DESIGN GROUP WEI | APPROVED PVL

FULTON.DGN