STATE	PROJECT NUMBER	SHEET NO.	TOTAL SHEETS
GA	STP-M001-00(147)	34	61

CATCH BASIN

(IF CATCH BASIN HAS LONGITUDINAL PIPE OVER 24", SEE DETAILS AT RIGHT)

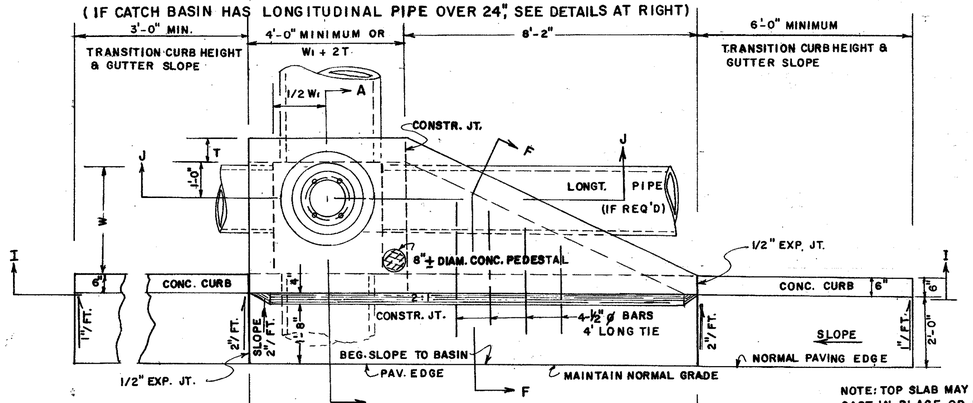

NOTE: 12'-0"(MIN.) PAYMENT FOR CATCH BASIN INCLUDES ALL QUANTITIES BETWEEN THESE LINES EXCEPT ADDITIONAL DEPTH (UNLESS OTHERWISE NOTED IN THE PLANS

SCALE: 1/2" = 1'

NOTE: TOP SLAB MAY BE CAST IN PLACE OR PRECAST. IF SLAB IS CAST IN PLACE, BUILDERS PAPER IS TO BE PLACED BETWEEN THE CATCH BASIN AND TOP SLAB.

PLAN

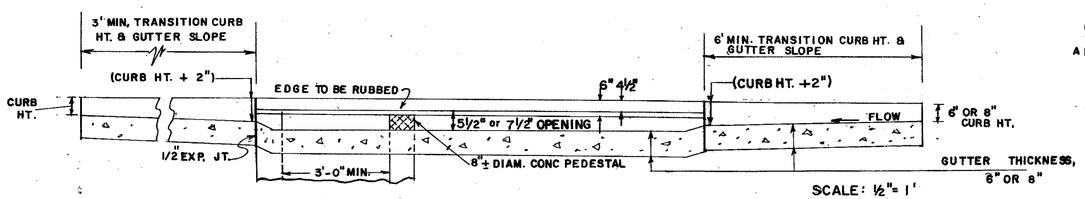

SCALE: 1/2" = 1'

SECTION I-I

NOTE: NORMAL SLOPE OF CONCRETE APRON TO BE INCREASED BY 4" TO 8" WHERE "H" PERMITS AND LONGITUDINAL PIPE IS LOWERED FOR OTHER REASONS.

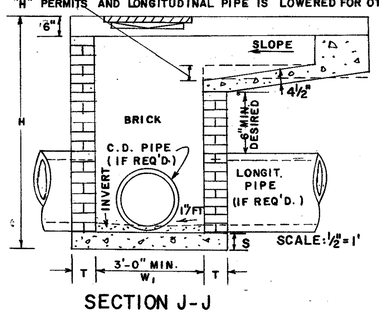

SCALE: 1/2" = 1'

SECTION J-J

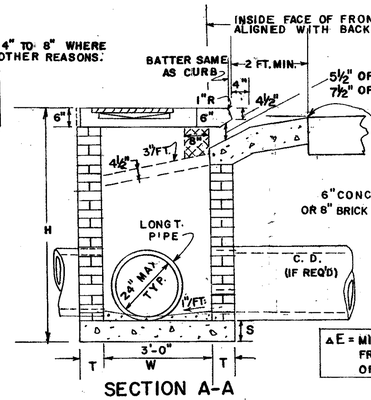

SECTION A-A

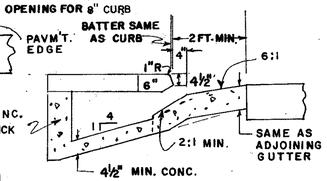

SECTION F-F

ΔE = MINIMUM DIFFERENCE IN ELEVATION FROM PAVEMENT EDGE TO FLOW LINE OF OUTLET PIPE.

DETAIL OF TOP REINFORCED CONCRETE SLAB

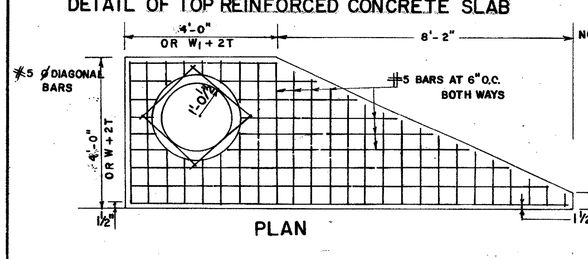

NOTE: ALL CATCH BASINS WILL HAVE STEPS OR LADDER BARS, NUMBER & LOCATION TO BE AS DIRECTED BY THE ENGINEER.

PLAN

NOTE: ALL BARS IN PLAN VIEW ARE SPACED AT 6" O.C.

NOTE: FOR PLAN DETAIL OF REINFORCING STEEL IN TOP PORTION OF SLAB, SEE PART PLAN AT TOP RIGHT.

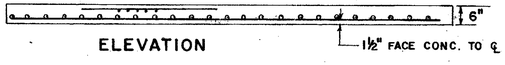

ELEVATION

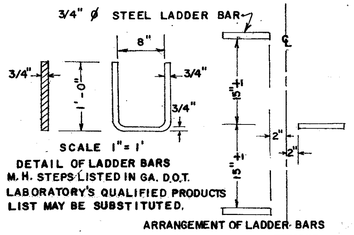

SCALE 1" = 1'

DETAIL OF LADDER BARS

NOTE: M.H. STEPS LISTED IN GA. D.O.T. LABORATORY'S QUALIFIED PRODUCTS LIST MAY BE SUBSTITUTED.

ARRANGEMENT OF LADDER BARS

W OR W1 (MAX.)	BOTTOM SLAB MATERIALS	S
TO 4'-6"	NON-REINF. CONCRETE	6"
	OR BRICK	8"
OVER 4'-6"	CONC. REINF. W1 #4 BARS 12" O.C. BOTH WAYS 2" CL. FROM SLAB TOP	8"

DETAIL OF TOP SLAB, REINF. STEEL & CLEARANCES REQ'D.

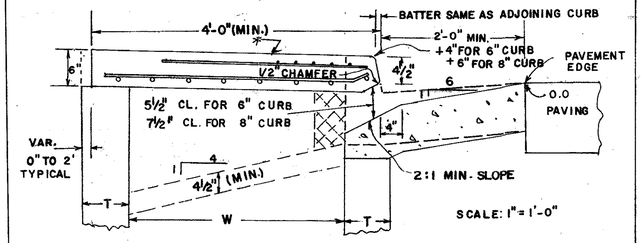

SCALE: 1" = 1'-0"

* SLOPE TOP TO MATCH ADJACENT SURFACES

CASTING DETAILS

3° TO 7° DRAFTS TYPICAL

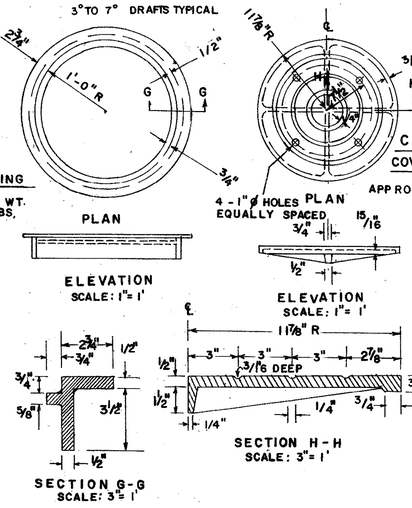

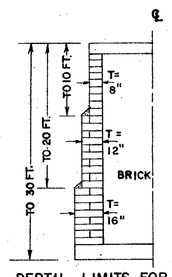

DEPTH LIMITS FOR INCREASING "T"

TYPICAL MIN. DIMENSIONS			
PIPE DIA.	H (MIN.)	W or W1	ΔE (MIN)
12	4'-4"	3'-0"	3'-3"
15	4'-7"	3'-0"	3'-6"
18	4'-10"	3'-0"	3'-9"
24	5'-6"	3'-0"	4'-4"
30	6'-2"	3'-7"	5'-0"
36	6'-10"	4'-6"	5'-7"
42	7'-4"	5'-3"	5'-11"
48	8'-0"	6'-0"	6'-6"
54	8'-6"	6'-8"	7'-0"
60	9'-2"	7'-4"	7'-7"

NOTE: THE MIN. H & MIN. ΔE GIVEN IN ABOVE TABLE ARE BASED UPON TYPICAL OUTSIDE DIAMETERS OF CONC. PIPE AND MAY BE VARIED IF CONDITIONS PERMIT WITH VARIED DIMENSIONS SPECIFIED IN THE PLANS OR DIRECTED BY THE ENGINEER. W, & W. DIMENSIONS DO NOT HAVE TO BE EQUAL.

(TYPICAL FOR CATCH BASIN WITH LARGE LONGITUDINAL PIPE OR RECESSED BOX)

CATCH BASIN - (WITH PROTRUDED BACK)

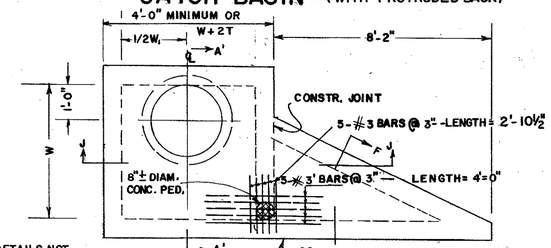

PART PLAN

NOTE: CATCH BASIN DETAILS NOT SHOWN HERE WILL BE SIMILAR TO THOSE AT LEFT FOR NORMAL CATCH BASIN.

NO SCALE

NOTE: RECESSED BOX TO BE USED ONLY WHERE SPECIFIED. SHALLOW LONG. PIPE OR UNDERGROUND OBSTRUCTION TYPICAL.

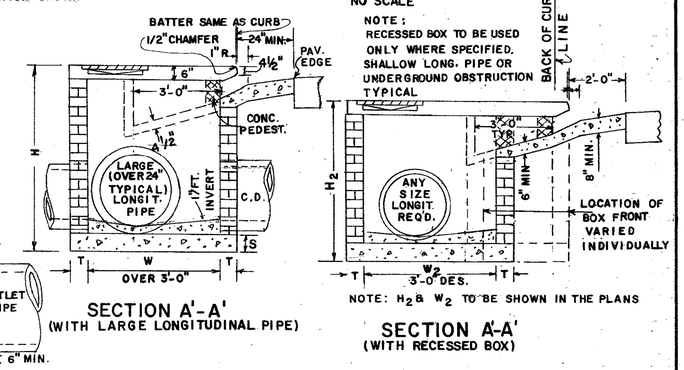

NOTE: H_2 & W_2 TO BE SHOWN IN THE PLANS

SECTION A'-A' (WITH LARGE LONGITUDINAL PIPE)

ALTERNATE TO INVERT

SECTION A'-A' (WITH RECESSED BOX)

DETAIL OF TOP REINFORCED CONCRETE SLAB

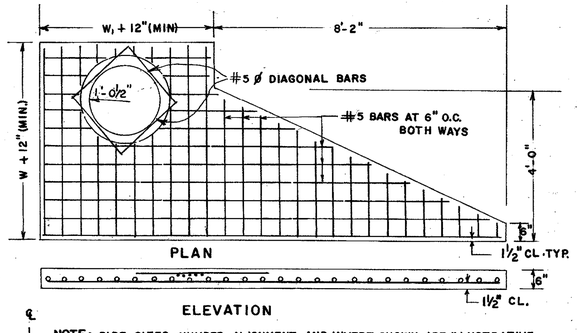

PLAN

ELEVATION

NOTE: PIPE SIZES, NUMBER, ALIGNMENT, AND INVERT SHOWN ARE ILLUSTRATIVE. SEE PLANS FOR SPECIFICS. INVERTS TO BE FORMED WITH GROUT OR CONCRETE AS DIRECTED BY THE ENGINEER OR AS SHOWN IN THE PLANS.

NOTE: SEE SEPARATE STDS. FOR PRECAST ALTERNATES ADAPTERS (STD. 1040) WILL BE REQUIRED WITH CIRCULAR PRECAST UNITS. PRECAST BOX, CIRCULAR, AND/OR BUILT-IN-PLACE CONSTR. MAY BE USED IN COMBINATIONS.

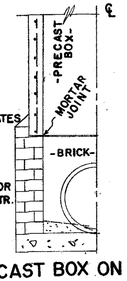

PRECAST BOX ON BRICK

(HALF-SECTION)

NOTE: TYPICAL TREATMENT FOR SKEWED PIPE ARE: CIRCULAR PRECAST SWIVEL SECTIONS; PIPE ELBOWS OR INCREASED BOX SIZE.

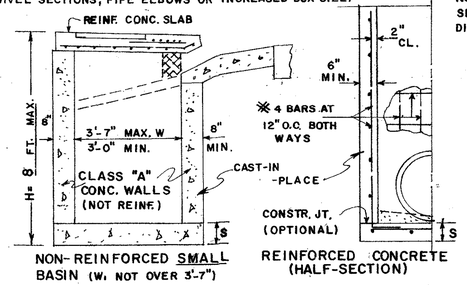

NON-REINFORCED SMALL BASIN (W1 NOT OVER 3'-7")

REINFORCED CONCRETE (HALF-SECTION)

CONSTRUCTION ALTERNATES

NOTE: DETAILS NOT SHOWN ABOVE FOR CONSTRUCTION ALTERNATES WILL BE SIMILAR TO BRICK CATCH BASIN DETAILS.

SEE SEPARATE STANDARDS FOR PRECAST ALTERNATES.

DEPARTMENT OF TRANSPORTATION
STATE OF GEORGIA

STANDARD CATCH BASINS

FOR USE WITH CURB (6" HT. OR 8" HT.) & GUTTER

SCALE AS SHOWN

RED. & REDR. AUGUST, 1982

REV. & REDR. R.M.U.
TRA. G.M.E.
CHK. RKC

(SUBMITTED) Floyd E. Harris
STATE ROAD & AIRPORT DESIGN ENGR.
(APPROVED) Thomas D. Anderson
STATE HIGHWAY ENGINEER

NUMBER 1033D

AF 21866

FORM EF3