STATE	PROJECT NUMBER	SHEET NO	TOTAL SHEETS
GA.	STP-M001-00(147)	29	61

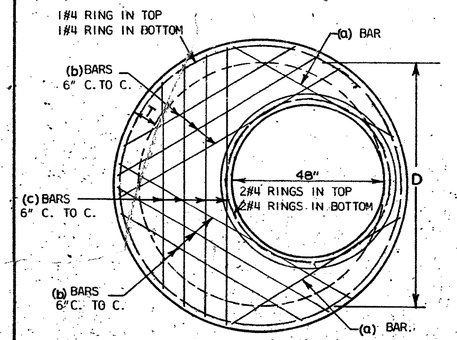

PLAN OF STEEL REINFORCEMENT

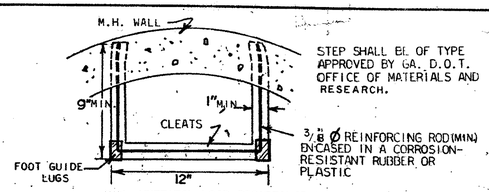

STEP SHALL BE OF TYPE APPROVED BY GA. D.O.T. OFFICE OF MATERIALS AND RESEARCH.

MIN. VERTICAL LOAD RESISTANCE = 400 LBS.
MIN. PULLOUT RESISTANCE = 700 LBS.

STEP DETAIL

D	Y MIN.	(a) BARS No.	(a) BARS SIZE	(b) BARS No.	(b) BARS SIZE	(c) BARS No.	(c) BARS SIZE
60"	8"	2	#6	4	#6	2	#6
72"	9"	2	#6	6	#6	4	#6

NOTE: 10 FT. MAXIMUM ALLOWANCE COVER ABOVE TOP OF REDUCER SLABS. REDUCER CONES TO BE USED WHERE REDUCER SLABS NOT PERMITTED.

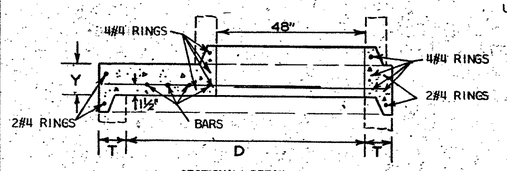

SECTIONAL DETAIL
REDUCER SLAB

D = INSIDE DIAMETER OF BASE UNIT

STEPS ARE REQUIRED IN ALL MANHOLES OVER 4 FT. IN HEIGHT.

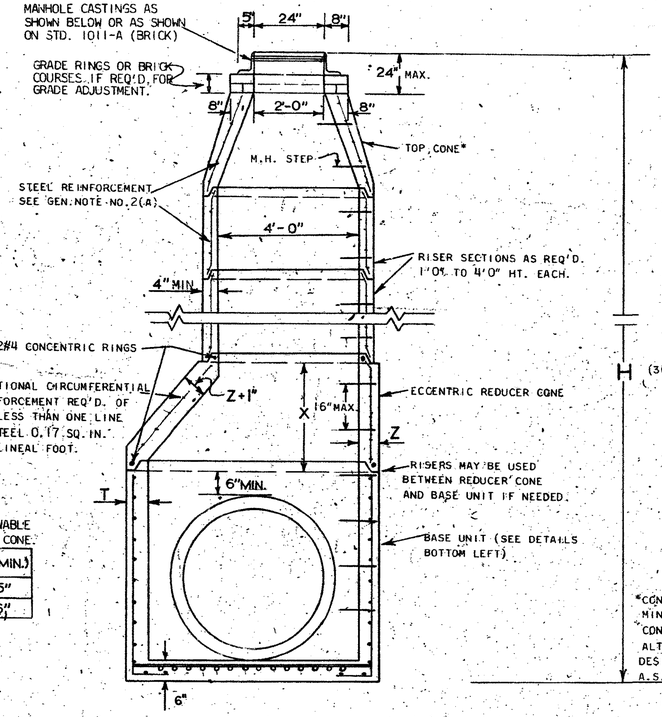

SECTIONAL DETAIL
(MANHOLE WITH BASE UNIT OF D=OVER 48")

NOTE:
25 FT. MAXIMUM ALLOWABLE COVER ABOVE REDUCER CONE.

D	X (MIN.)	Z (MIN.)
60"	1'-6"	5"
72"	3'-0"	6"

*CONCENTRIC CONE SHOWN MIN. HT. = 2'0". ECCENTRIC CONES MAY BE USED AS AN ALTERNATE, MIN. HT. = 3'0" DESIGNED ACCORDING TO A.S.T.M. C-478

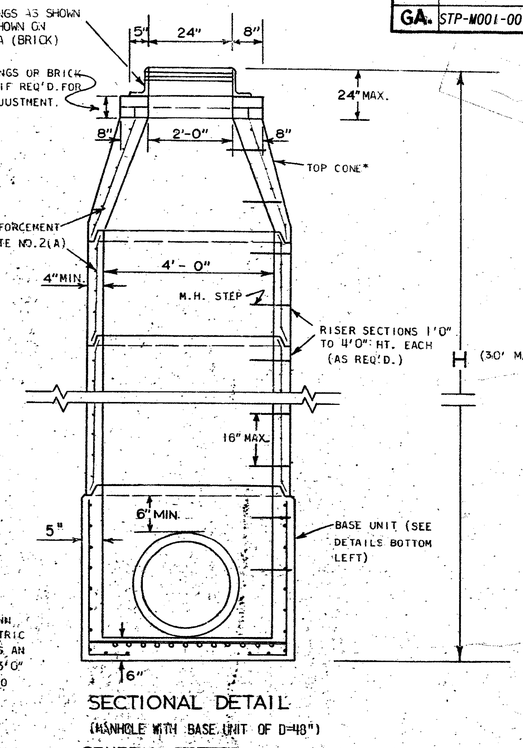

SECTIONAL DETAIL
(MANHOLE WITH BASE UNIT OF D=48")

PRECAST HOLE FOR PIPE. SEE GEN. NOTES NO. 3, 4, & 5

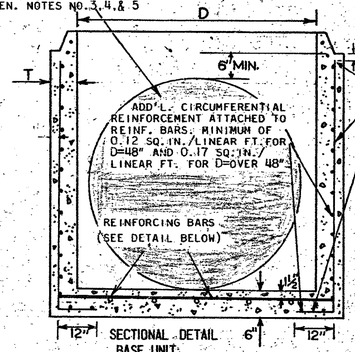

SECTIONAL DETAIL
BASE UNIT

BASE UNIT SHALL CONTAIN IN ADDITION TO A.S.T.M. C-478 REINFORCEMENT, TWO NO. 5 VERTICAL BARS AT EACH OPENING EXTENDING FROM WITHIN 2" OF JOINT DOWN WALL INTO BOTTOM SLAB AS SHOWN MINIMUM 2" CLEARANCE ALL AROUND.

D	T (MIN)
48"	5"
60"	5"
72"	6"

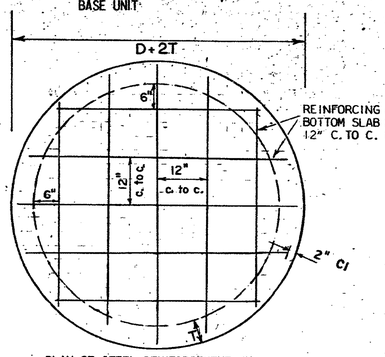

REINFORCING BARS IN TOP OF BOTTOM SLAB MAXIMUM SPACING 12" C. TO C. BOTH WAYS

D	BAR SIZE
48"	#5
60"	#6
72"	#6

PLAN OF STEEL REINFORCEMENT IN BOTTOM SLAB

BASE UNIT

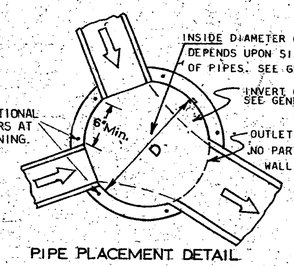

PIPE PLACEMENT DETAIL

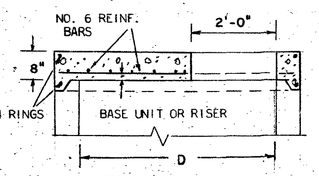

SECTIONAL DETAIL

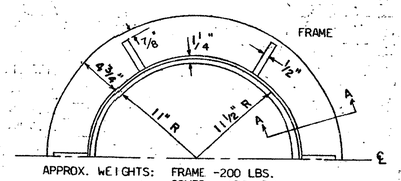

APPROX. WEIGHTS: FRAME - 200 LBS.
COVER - 135 LBS.

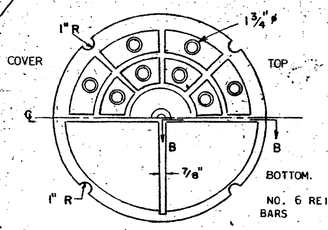

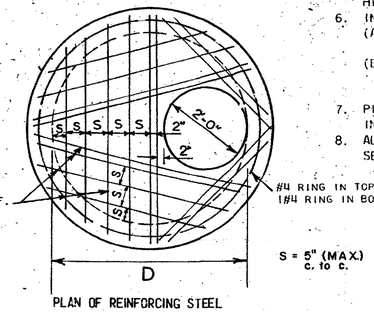

PLAN OF REINFORCING STEEL

FLAT TOP SLAB IS FOR USE IN AREA OF MINIMUM COVER ONLY. MAXIMUM HEIGHT OF MANHOLE WITH FLAT TOP SLAB SHALL BE 4 FT. ABOVE TOP OF HIGHEST ENTERING PIPE.

FLAT TOP SLAB

NOTE: FRAME AND COVER TO BE FITTED BEFORE LEAVING SHOP.

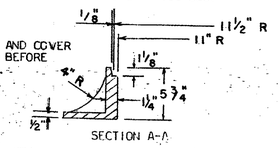

SECTION A-A

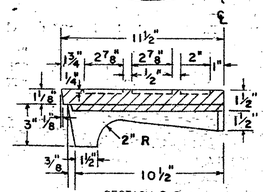

SECTION B-B

MANHOLE CASTINGS (C.I.)

GENERAL NOTES.

1. MATERIALS: ALL CONCRETE, STEEL BARS AND STEEL WIRE REINFORCEMENT SHALL COMPLY WITH SECTION 866.02 OF GEORGIA STANDARD SPECIFICATIONS AND SPECIAL PROVISION WHICH MODIFY SECTION 866.02.
2. REINFORCEMENT:
   (A) PLACEMENT AND DESIGN OF STEEL REINFORCEMENT IN RISER UNITS, CONE SECTIONS, GRADE RINGS AND JOINTS SHALL BE IN COMPLIANCE WITH A.S.T.M. C-478 UNLESS OTHERWISE NOTED.
   (B) BASE UNITS, REDUCER SLABS AND FLAT TOP SLABS SHALL HAVE STEEL REINFORCEMENT AS SHOWN IN DETAILS AT LEFT.
3. OPENINGS FOR PIPES LARGER THAN 6 INCHES IN DIAMETER ARE TO BE PRECAST. A MINIMUM OF 6" ALONG THE INTERCIRCUMFERENCE IS TO REMAIN BETWEEN THE EXTREMITIES OF HOLE FOR ADJACENT PIPE IN ANY SINGLE UNIT. A MINIMUM OF TWO REINF. BARS SHALL REMAIN IN WALL BETWEEN ANY TWO OPENINGS.
4. THE CONTRACTOR WILL FURNISH THE FABRICATOR WITH THE ANGLE OF ALINEMENT AND SIZE OF ALL PIPES TO ENTER MANHOLE AND THE HEIGHT OF STRUCTURE.
5. BASE UNITS SHALL HAVE SUFFICIENT HEIGHT TO ALLOW FOR MINIMUM OF 6" OF WALL BETWEEN TOP OF HIGHEST OPENING FOR PIPES AND BOTTOM OF JOINT.
6. INVERT CHANNELS:
   (A) FOR SANITARY SEWER MANHOLES SEE GEORGIA STANDARD SPECIFICATIONS FOR CHANNEL REQUIREMENTS.
   (B) FOR STORM SEWER MANHOLES, CHANNELS BUILT TO SUIT PIPE SIZES AND LOCATION. HEIGHT OF CHANNEL EQUAL TO 1/2 DIAMETER OF OUTLET PIPE. CHANNEL BUILT FROM GROUT OR CLASS "A" CONCRETE.
7. PIPES ARE TO BE EXTENDED INTO STRUCTURE WALL A MINIMUM OF 4" BUT SHOULD NOT EXTEND BEYOND INTERIOR WALL OF STRUCTURE.
8. ALL JOINTS, EXCEPT FOR GRADE RINGS AND TOP OF TOP CONE, SHALL HAVE TONGUE AND GROOVE SECTION.

REVISIONS	BY	DATE
CASTINGS & BASE U.	RMU	6-1-75

DEPARTMENT OF TRANSPORTATION
STATE OF GEORGIA

STANDARD
PRECAST REINFORCED CONCRETE MANHOLE

NO SCALE — AUGUST, 1973

DESIGNED: GCL / RMU
DRAWN: RMU
CHECKED: JEC

SUBMITTED: J. S. Rutter
STATE ROAD DESIGN ENGINEER
APPROVED:
STATE HIGHWAY ENGINEER

NUMBER 1011-A
PRECAST