STATE	PROJECT NUMBER	SHEET NO.	TOTAL SHEETS
GA.	STP-M000-00 (864)	24	26

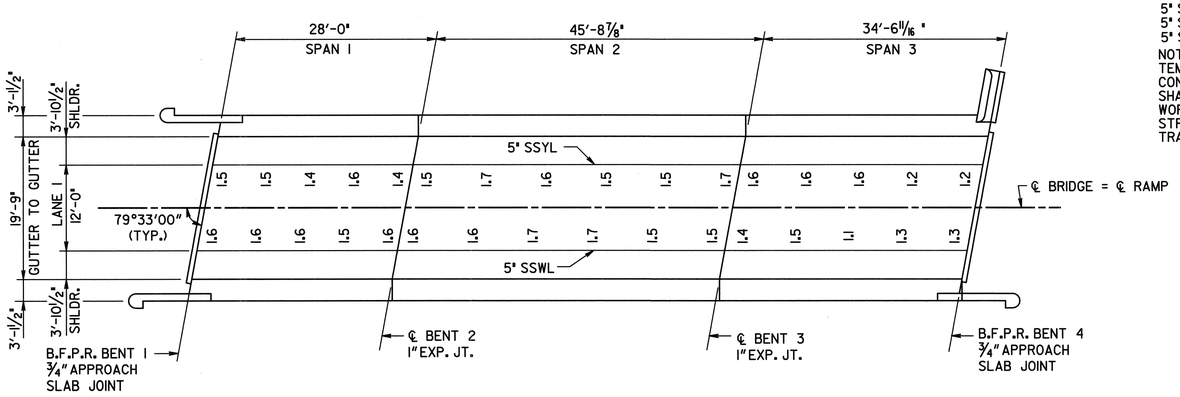

PLAN

PAVEMENT MARKING LEGEND

5" SSYL - 5" SINGLE SOLID YELLOW LINE
5" SSWL - 5" SINGLE SOLID WHITE LINE
5" SDWL - 5" SINGLE DASHED WHITE LINE

NOTE :
TEMPORARY STRIPING SHALL BE USED DURING CONSTRUCTION. THERMOPLASTIC STRIPING SHALL BE DONE AFTER ALL DECK OVERLAY WORK IS COMPLETED. THE COST OF TEMPORARY STRIPING SHALL BE INCLUDED IN THE COST FOR TRAFFIC CONTROL.

* SEAL AS PER SPECIAL PROVISION SECTION 449. SEAL SHALL BE 2" (H) BY (W) WIDE PRIOR TO INSTALLATION.

EXP. JT.	(W)
3/4"	1"
1"	1 1/4"

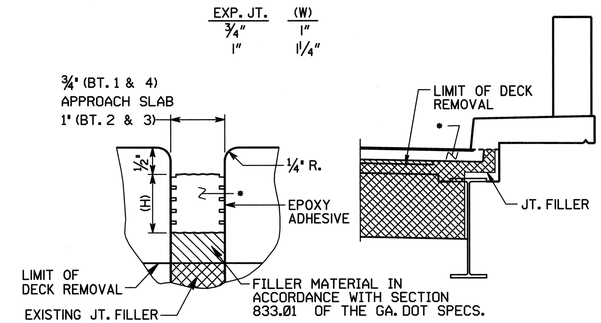

LONGITUDINAL SECTION TRANSVERSE SECTION

EXPANSION JOINT DETAILS

NOTES :
DECK CLEARANCES ARE BASED ON COVER METER READINGS TAKEN BY THE GA. D.O.T. AND ARE GIVEN FOR INFORMATION ONLY. CONTRACTOR SHALL PERFORM THE WORK BASED ON ACTUAL EXISTING STEEL CLEARANCES.

EXISTING CLEARANCES SHOWN ARE IN INCHES AND ARE AT THE APPROXIMATE LOCATION OF THE COVER METER READINGS.

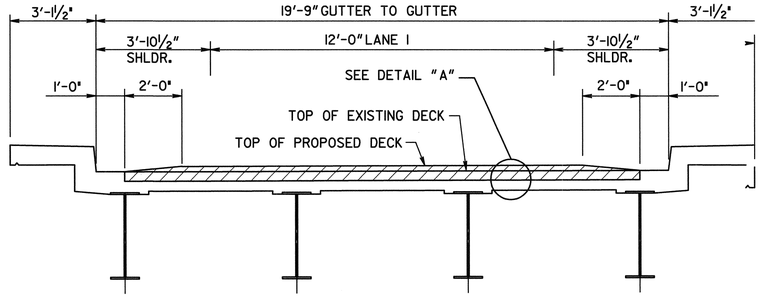

SECTION THRU SLAB
(LOOKING AHEAD)

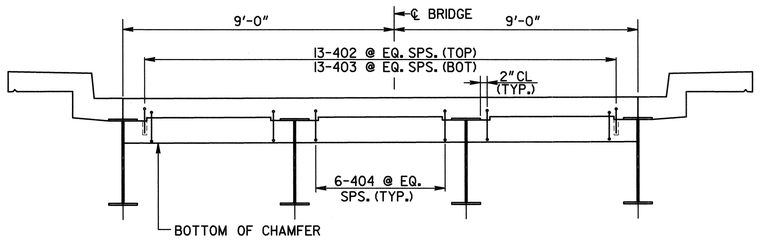

SECTION THRU ENDWALL

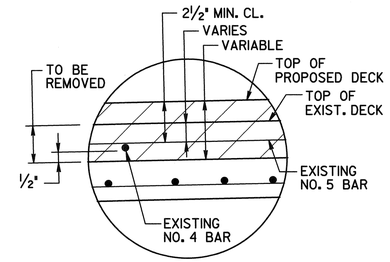

DETAIL "A"

LOCATION	NO. OF LOC.	MARK	LENGTH FT.	LENGTH IN.	NO. BARS REQ'D.	TYPE	A	G	B FT.	B IN.	C FT.	C IN.	D FT.	D IN.	E FT.	E IN.
BENTS 1& 4	2															
		402	3	6	13	3			2	6	1	0				
		403	3	4	13	3			2	6	0	10				
		404	3	3	18	34	6		0	6	1	3	1	0	1	3

C:\DGN\ 2019\CT10\BOL10-7D.DGN 5-21-02 ITD

BRIDGE NO. 7

J.B. Trimble, Inc.
6445 Powers Ferry Road
Atlanta GA 30339-2933
(770) 952-1022

GEORGIA
DEPARTMENT OF TRANSPORTATION
OPERATIONS DIVISION-OFFICE OF MAINTENANCE

DISTRICT 2 BRIDGE REPAIRS (DECK OVERLAY)
S.R. 10 RAMP TO WBL OVER ELLIS STREET
RICHMOND COUNTY STP-M000-00 (864)

GEORGIA REGISTERED No. 16935 PROFESSIONAL ENGINEER SAMUEL E. POWELL, JR.
05-24-02

BY	REVISIONS	DATE

BRIDGE SHEET 2 OF 2

SCALE: AS SHOWN APRIL 2002

DESIGNED PJC CHECKED GLE REVIEWED EHG
DRAWN ITD DESIGN GROUP MAINTENANCE APPROVED STH