STATE	PROJECT NUMBER	SHEET NO.	TOTAL SHEETS
GA.	STP-M000-00 (864)	20	26

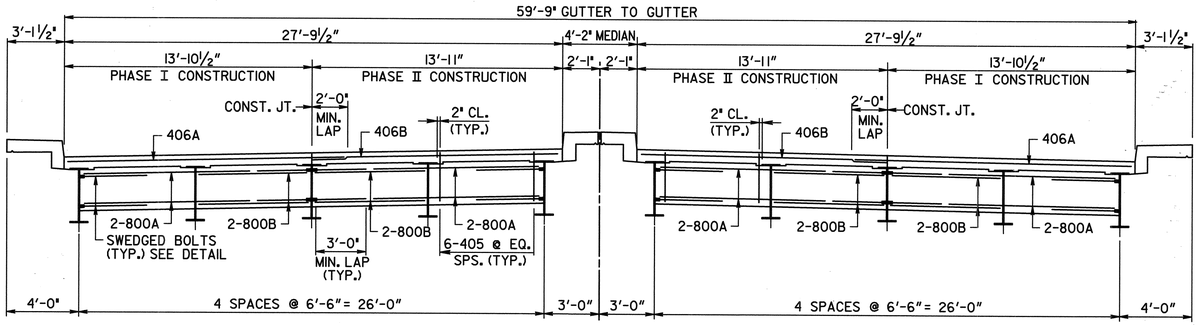

SECTION AT EDGE BEAM - BENTS 4, 7 & 10

(LOOKING AHEAD)

CONSTRUCTION SEQUENCE

1. PLACE TEMPORARY TRAFFIC CONTROL MEASURES FOR PHASE I CONSTRUCTION.
2. SAWCUT AND REMOVE EXISTING DECK SLAB FOR ENDWALLS TO LIMITS SHOWN ON PLANS.
3. CLEAN EXISTING DECK REINFORCEMENT TO REMAIN IN PLACE.
4. PLACE NEW END WALL REINFORCEMENT.
5. FORM AND CAST END WALL AND DECK SLAB CONCRETE.
6. REPEAT STEPS I THROUGH 5 FOR PHASE II CONSTRUCTION.
7. COMPLETE DECK OVERLAY AND JOINT SEALING OPERATIONS.
8. REPEAT STEPS I THROUGH 5 FOR PHASE I AND II OF THE EDGE BEAM AND JOINT REPLACEMENT AT BENTS 4, 7 AND 10.

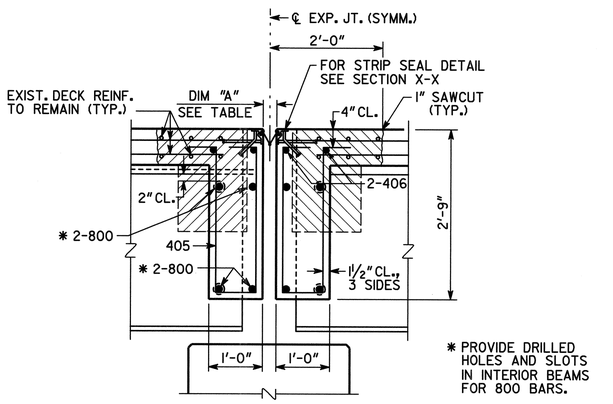

SECTION THRU EDGE BEAM

(BENTS 4, 7 & 10)

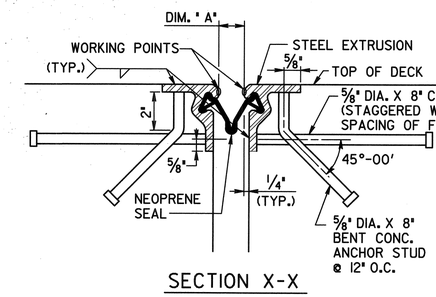

SECTION X-X

JOINT OPENING			
TEMP °F	DIM. "A" (IN.)		
	BT 4	BT 7	BT 10
120	1.00	1.00	1.00
110	1.25	1.17	1.25
100	1.50	1.33	1.50
90	1.75	1.50	1.75
80	2.00	1.66	2.00
70	2.25	1.83	2.25
60	2.50	2.00	2.50
50	2.75	2.17	2.75
40	3.00	2.33	3.00
30	3.25	2.50	3.25
20	3.50	2.67	3.50
10	3.75	2.83	3.75
0	4.00	3.00	4.00

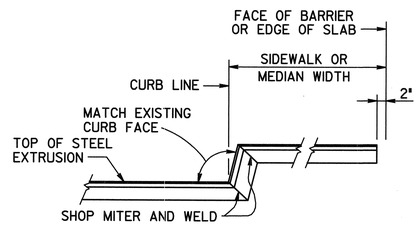

SIDEWALK AND MEDIAN DETAIL

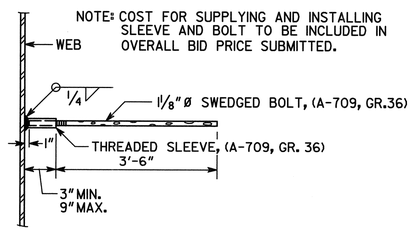

EDGE BEAM BAR LAP DETAIL

BRIDGE NO. 5

JBT J.B. Trimble, Inc.
6445 Powers Ferry Road
Atlanta GA 30339-2933
(770) 952-1022

GEORGIA
DEPARTMENT OF TRANSPORTATION
OPERATIONS DIVISION-OFFICE OF MAINTENANCE

DISTRICT 2 BRIDGE REPAIRS (DECK OVERLAY)
S. R. 10 OVER CSXT AND SAVANNAH RIVER
RICHMOND COUNTY STP-M000-00 (864)

GEORGIA REGISTERED No. 16650 PROFESSIONAL ENGINEER SAMUEL L. POWELL, JR.
05-24-02

BY	REVISIONS	DATE

BRIDGE SHEET 5 OF 5

SCALE: AS SHOWN APRIL 2002

DESIGNED PJC CHECKED GLE REVIEWED EHG
DRAWN ITD DESIGN GROUP MAINTENANCE APPROVED STH

C:\DGN\ 2019\CT10\BOL10 5 DS.DGN 5-21-02 ITD