STATE	PROJECT NUMBER	SHEET NO.	TOTAL SHEETS
GA.	STP-M000-00 (864)	19	26

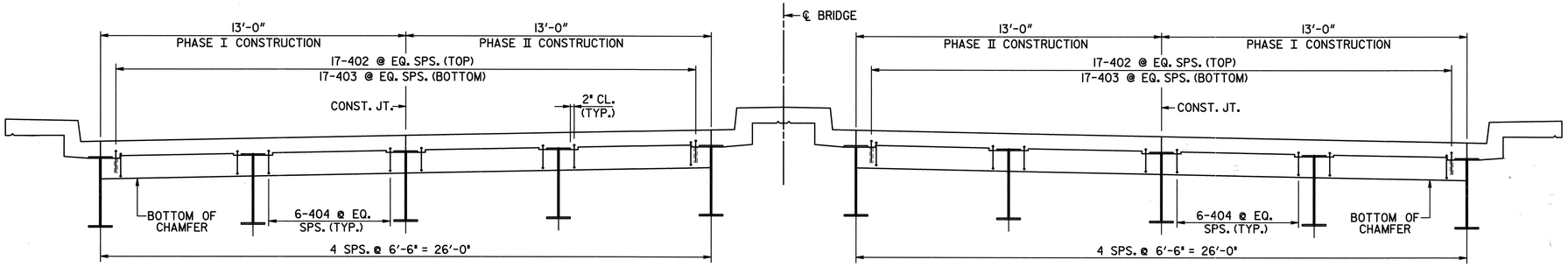

SECTION AT ENDWALL- BENT 1

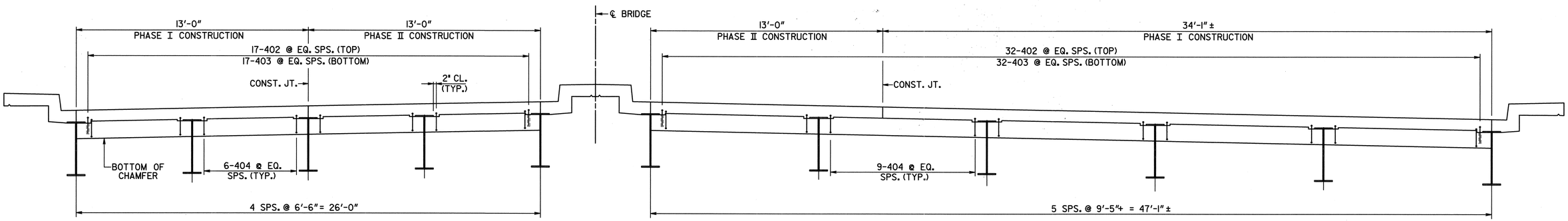

SECTION AT ENDWALL- BENT 14

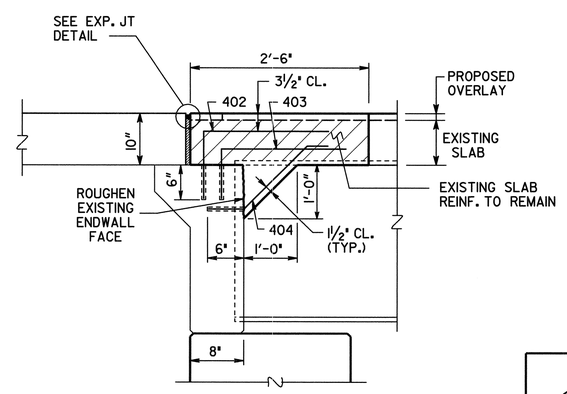

SLAB REINFORCEMENT NOT SHOWN.

SECTION THRU ENDWALL

BRIDGE NO. 5

JBT
J.B. Trimble, Inc.
6445 Powers Ferry Road
Atlanta GA 30339-2933
(770) 952-1022

GEORGIA
DEPARTMENT OF TRANSPORTATION
OPERATIONS DIVISION-OFFICE OF MAINTENANCE

DISTRICT 2 BRIDGE REPAIRS (DECK OVERLAY)

S.R. 10 OVER CSXT AND SAVANNAH RIVER

RICHMOND COUNTY STP-M000-00 (864)

GEORGIA REGISTERED No. 16905 PROFESSIONAL ENGINEER SAMUEL L. POWELL, JR.
05-24-02

BY	REVISIONS	DATE

BRIDGE SHEET 4 OF 5

SCALE: AS SHOWN APRIL 2002

DESIGNED PJC CHECKED GLE REVIEWED EHG
DRAWN ITD DESIGN GROUP MAINTENANCE APPROVED STH

C:\DGN\ 2019\CT10\BOL10 5D3.DGN 5-21-02 ITD