STATE	PROJECT NUMBER	SHEET NO.	TOTAL SHEETS
GA.	STP-M000-00 (864)	18	26

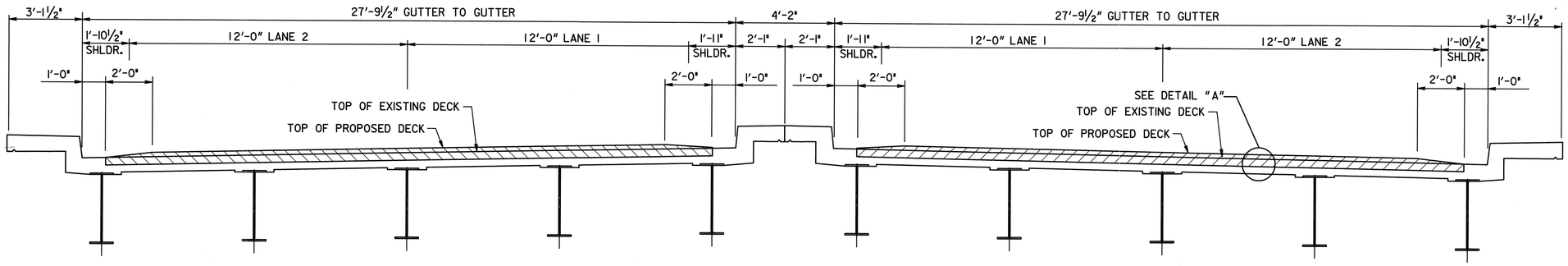

SECTION THRU SLAB - SPANS 1 - 10
(LOOKING AHEAD)

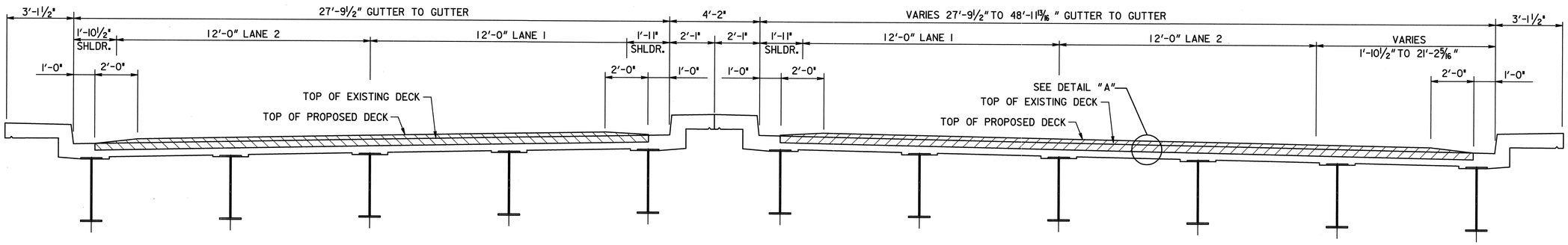

SECTION THRU SLAB - SPANS 11 - 13
(LOOKING AHEAD)

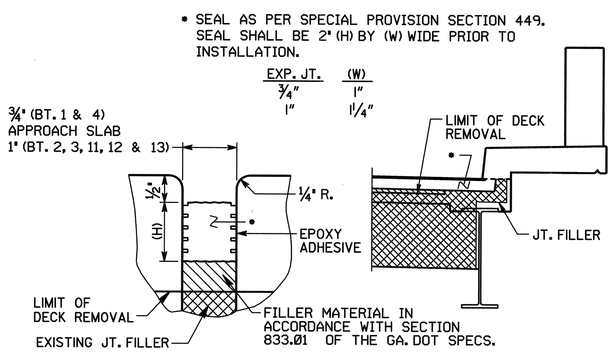

LONGITUDINAL SECTION TRANSVERSE SECTION

EXPANSION JOINT DETAILS

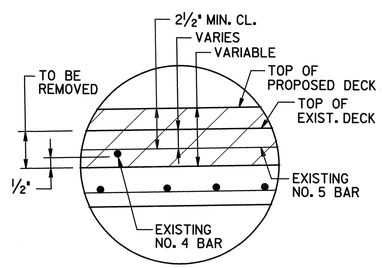

DETAIL "A"

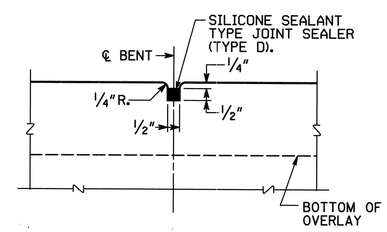

DUMMY JOINT DETAIL
NO SCALE

BRIDGE NO. 5

JBT
J.B. Trimble, Inc.
6445 Powers Ferry Road
Atlanta GA 30339-2933
(770) 952-1022

GEORGIA
DEPARTMENT OF TRANSPORTATION
OPERATIONS DIVISION-OFFICE OF MAINTENANCE

DISTRICT 2 BRIDGE REPAIRS (DECK OVERLAY)
S.R. 10 OVER CSXT AND SAVANNAH RIVER
RICHMOND COUNTY STP-M000-00 (864)

SCALE: AS SHOWN APRIL 2002

DATE	REVISIONS	BY

GEORGIA REGISTERED No. 16865 PROFESSIONAL ENGINEER SAMUEL L. POWELL, JR.
05-24-02

BRIDGE SHEET 3 OF 5

DESIGNED PJC CHECKED GLE REVIEWED EHG
DRAWN ITD DESIGN GROUP MAINTENANCE APPROVED STH

C:\DGN\ 2019\CTIO\BOLIO5D2.DGN 5-21-02 ITD