STATE	PROJECT NUMBER	SHEET NO.	TOTAL SHEETS
GA.	STP-M000-00 (864)	15	26

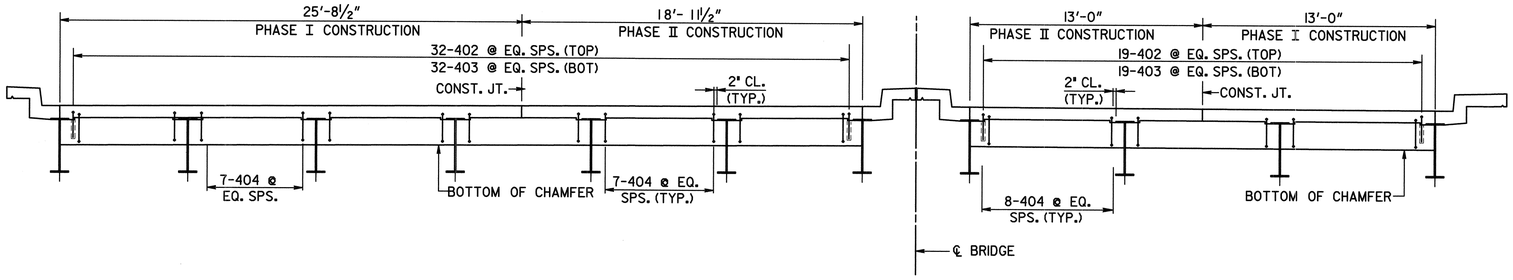

SECTION AT ENDWALL - BENT 1

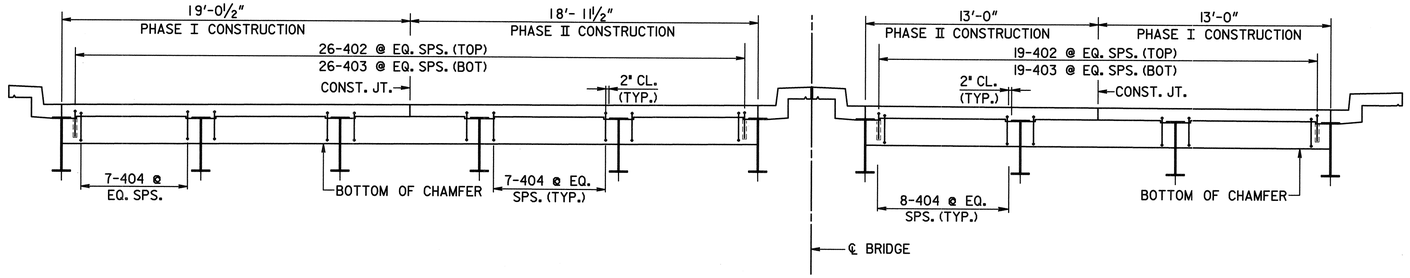

SECTION AT ENDWALL - BENT 5

CONSTRUCTION SEQUENCE

1. PLACE TEMPORARY TRAFFIC CONTROL MEASURES FOR PHASE I CONSTRUCTION.
2. SAWCUT AND REMOVE EXISTING DECK SLAB TO LIMITS SHOWN ON PLANS.
3. CLEAN EXISTING DECK REINFORCEMENT TO REMAIN IN PLACE.
4. PLACE NEW END WALL REINFORCEMENT.
5. FORM AND CAST END WALL AND DECK SLAB CONCRETE.
6. REPEAT STEPS 1 THROUGH 5 FOR PHASE II CONSTRUCTION.
7. COMPLETE DECK OVERLAY AND JOINT SEALING OPERATIONS.

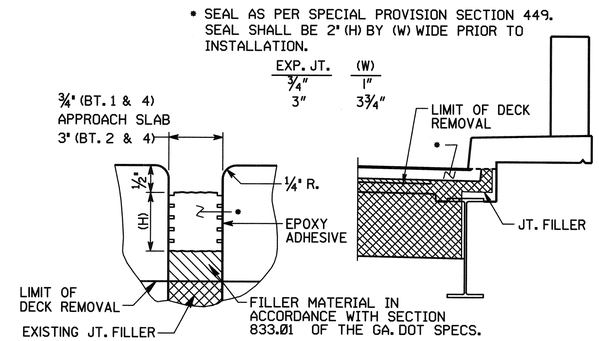

LONGITUDINAL SECTION TRANSVERSE SECTION

EXPANSION JOINT DETAILS

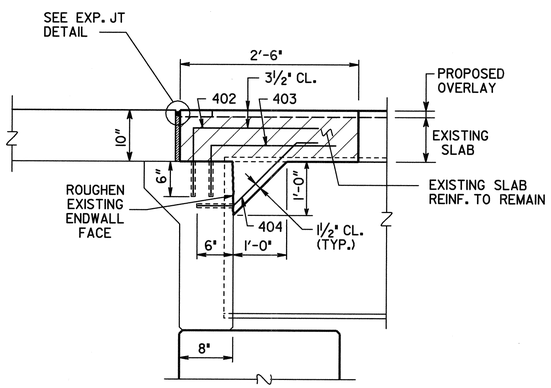

SLAB REINFORCEMENT NOT SHOWN.

SECTION THRU ENDWALL

LOCATION	NO. OF LOC.	MARK	LENGTH FT.	LENGTH IN.	NO. BARS REQ'D.	TYPE	A	G	B FT.	B IN.	C FT.	C IN.	D FT.	D IN.	E FT.	E IN.
BENT 1	1															
		402	3	6	51	3			2	6	1	0				
		403	3	4	51	3			2	6	0	10				
		404	3	3	66	34	6		0	6	1	3	1	0	1	3
BENT 5	1															
		402	3	6	45	3			2	6	1	0				
		403	3	4	45	3			2	6	0	10				
		404	3	3	59	34	6		0	6	1	3	1	0	1	3

C:\DGN\ 2019\CTIO\BOLIO 4DS.DGN 10-15-01 ITD

BRIDGE NO. 4

JBT J.B. Trimble, Inc.
6445 Powers Ferry Road
Atlanta GA 30339-2933
(770) 952-1022

GEORGIA
DEPARTMENT OF TRANSPORTATION
OPERATIONS DIVISION-OFFICE OF MAINTENANCE

DISTRICT 2 BRIDGE REPAIRS (DECK OVERLAY)

S.R. 10 OVER BROAD STREET

RICHMOND COUNTY STP-M000-00 (864)

GEORGIA REGISTERED No. 15605 PROFESSIONAL ENGINEER SAMUEL L. POWELL, JR.
05-24-02

BRIDGE SHEET 3 OF 3

BY	REVISIONS	DATE

SCALE: AS SHOWN APRIL 2002

DESIGNED PJC CHECKED GLE REVIEWED EHG
DRAWN ITD DESIGN GROUP MAINTENANCE APPROVED STH