STATE	PROJECT NUMBER	SHEET NO.	TOTAL SHEETS
GA.	STP-M000-00 (864)	11	26

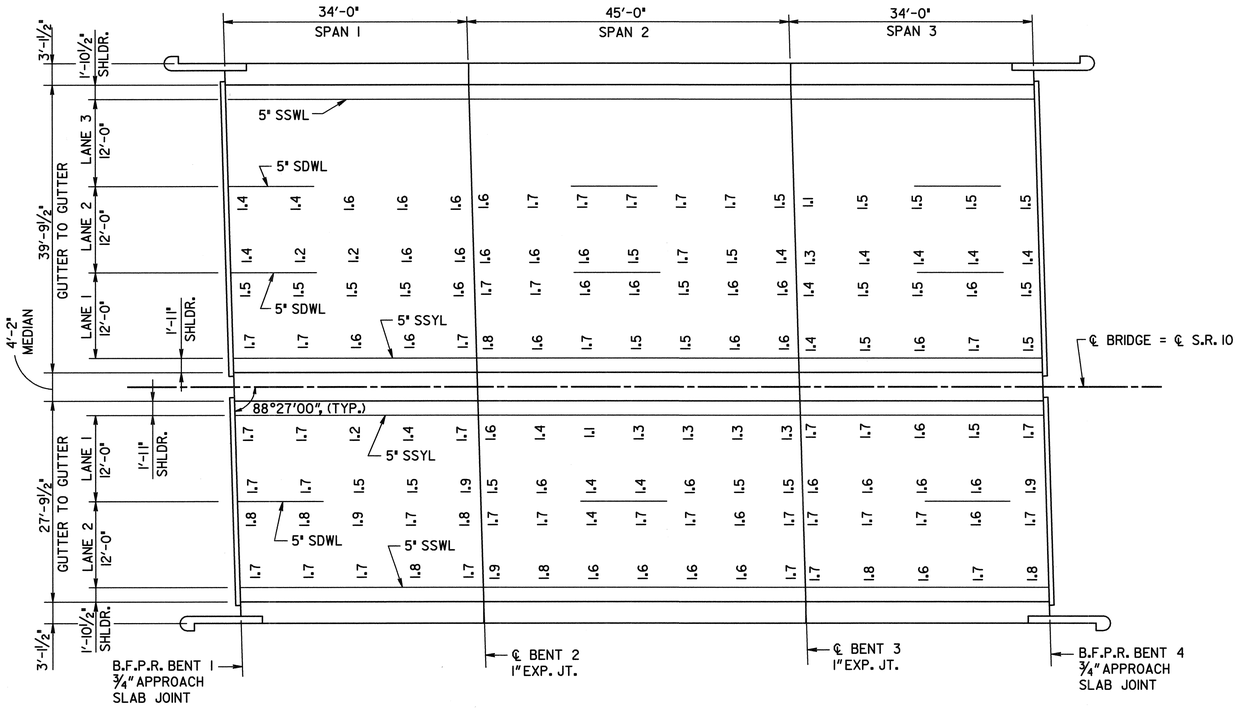

PLAN

NOTES :
DECK CLEARANCES ARE BASED ON COVER METER READINGS TAKEN BY THE GA. D.O.T. AND ARE GIVEN FOR INFORMATION ONLY. CONTRACTOR SHALL PERFORM THE WORK BASED ON ACTUAL EXISTING STEEL CLEARANCES.

EXISTING CLEARANCES SHOWN ARE IN INCHES AND ARE AT THE APPROXIMATE LOCATION OF THE COVER METER READINGS.

PAVEMENT MARKING LEGEND

5" SSYL - 5" SINGLE SOLID YELLOW LINE
5" SSWL - 5" SINGLE SOLID WHITE LINE
5" SDWL - 5" SINGLE DASHED WHITE LINE

NOTE :
TEMPORARY STRIPING SHALL BE USED DURING CONSTRUCTION. THERMOPLASTIC STRIPING SHALL BE DONE AFTER ALL DECK OVERLAY WORK IS COMPLETED. THE COST OF TEMPORARY STRIPING SHALL BE INCLUDED IN THE COST FOR TRAFFIC CONTROL.

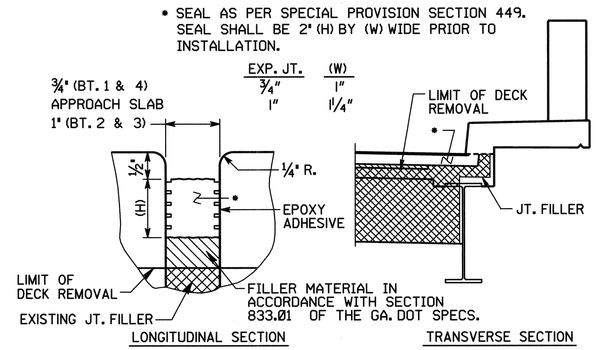

EXPANSION JOINT DETAILS

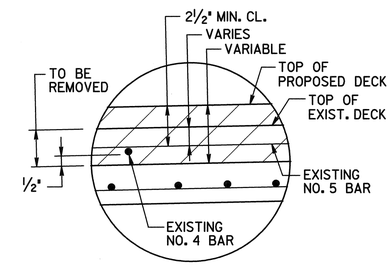

DETAIL "A"

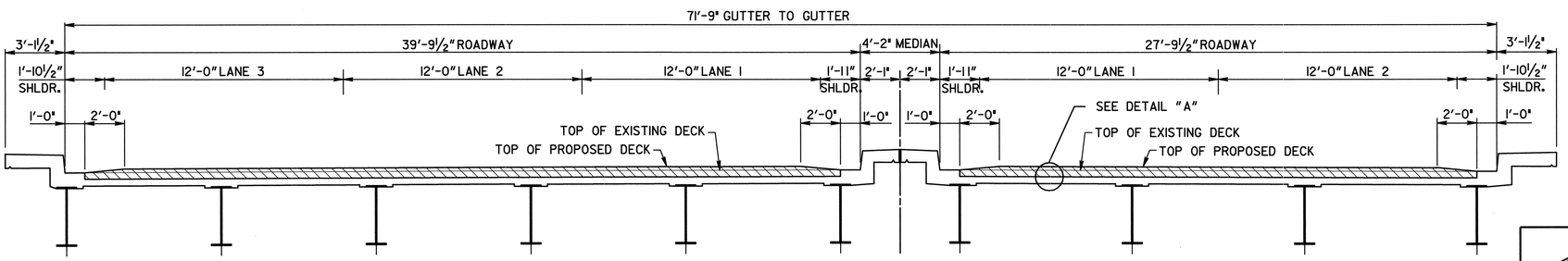

SECTION THRU SLAB
(LOOKING AHEAD)

BRIDGE NO. 3

J.B. Trimble, Inc.
6445 Powers Ferry Road
Atlanta GA 30339-2933
(770) 952-1022

GEORGIA
DEPARTMENT OF TRANSPORTATION
OPERATIONS DIVISION-OFFICE OF MAINTENANCE

DISTRICT 2 BRIDGE REPAIRS (DECK OVERLAY)

S.R. 10 OVER ELLIS STREET

RICHMOND COUNTY STP-M000-00 (864)

SCALE: AS SHOWN APRIL 2002

GEORGIA REGISTERED PROFESSIONAL ENGINEER No. 16895 SAMUEL L. POWELL, JR.
05-24-02

REVISIONS	DATE	BY

BRIDGE SHEET 2 OF 3

DESIGNED PJC | CHECKED GLE | REVIEWED EHG
DRAWN ITD | DESIGN GROUP MAINTENANCE | APPROVED STH

C:\DGN\ 2019\CT10\BOL10-3D.DGN 5-21-02 ITD